ORDINANCE NO. 07-950

AN ORDINANCE CONSENTING TO THE ADDITION OF 904.05 ACRES OF LAND TO THE CITY OF FULSHEAR, TEXAS.

BE IT ORDAINED BY THE CITY COUNCIL OF THE CITY OF FULSHEAR, TEXAS:

Section I.

That attached to this Ordinance and made a part hereof is a petition requesting the consent of the City of Fulshear, Texas, to the annexation of 904.05 acres of land into the City of Fulshear, Texas; such petition is hereby granted, subject to the terms and conditions set forth herein.

Section II.

That the City Council officially finds, determines, recites and declares that a sufficient written notice of the date, hour, place and subject of this meeting of the City Council was posted at a place convenient to the public at the City Hall of the City for the time required by law preceding this meeting, as required by the Open Meetings Law, Tex.Gov't Code Ann., Ch. 551 (Vernon Supp. 2004); and that this meeting was open to the public as required by law at all times during which this ordinance and the subject matter thereof was discussed, considered and formally acted upon. The City Council further ratifies, approves and confirms such written notice and the contents and posting thereof.

Section III.

This Ordinance shall take effect from and after the date of its passage, and all Ordinances or portion of Ordinances heretofore passed in conflict with the terms hereof are specifically repealed.

Section IV.

If any provision, section, subsection, sentence, clause, phrase of this Ordinance, or the

application of same to any person or set of circumstances is for any reason held to be unconstitutional, void or invalid, the validity of the remaining portions of this Ordinance or their application to other persons or sets of circumstance shall not be affected thereby, it being the intent of the City Council in adopting this Ordinance that no portion thereof or provision, or regulation contained herein, shall become inoperative or fail by reason of any unconstitutionality of any other portion hereof and all provisions of this Ordinance are declared to be severable for that purpose.

Section VI.

The City Secretary is instructed to post and publish notice of this Ordinance as required by law, by publishing only the descriptive caption.

PASSED AND APPROVED this 23rd day of January, 2007.

THE CITY OF FULSHEAR, TEXAS

By: _____
JAMIE W. ROBERTS
Mayor

ATTEST:
By: _____
D. GORDON OFFORD
City Secretary

ALDERMEN VOTING:

BILL ARCHER	yes
J.B. COLLINS	yes
LAVERNE PATTERSON	yes
DENNIS CLACK	yes
CARL G. UTLEY	yes

a:\Trendmaker Petition Ordinance
ClearGreenOrdinanceDisk

ORDINANCE NO. 07-951

AN ORDINANCE CONSENTING TO THE ADDITION OF 123 ACRES OF LAND TO THE CITY OF FULSHEAR, TEXAS.

BE IT ORDAINED BY THE CITY COUNCIL OF THE CITY OF FULSHEAR, TEXAS:

Section I.

That attached to this Ordinance and made a part hereof is a petition requesting the consent of the City of Fulshear, Texas, to the annexation of 123 acres of land into the City of Fulshear, Texas; such petition is hereby granted, subject to the terms and conditions set forth herein.

Section II.

That the City Council officially finds, determines, recites and declares that a sufficient written notice of the date, hour, place and subject of this meeting of the City Council was posted at a place convenient to the public at the City Hall of the City for the time required by law preceding this meeting, as required by the Open Meetings Law, Tex.Gov't Code Ann., Ch. 551 (Vernon Supp. 2004); and that this meeting was open to the public as required by law at all times during which this ordinance and the subject matter thereof was discussed, considered and formally acted upon. The City Council further ratifies, approves and confirms such written notice and the contents and posting thereof.

Section III.

This Ordinance shall take effect from and after the date of its passage, and all Ordinances or portion of Ordinances heretofore passed in conflict with the terms hereof are specifically repealed.

Section IV.

If any provision, section, subsection, sentence, clause, phrase of this Ordinance, or the

application of same to any person or set of circumstances is for any reason held to be unconstitutional, void or invalid, the validity of the remaining portions of this Ordinance or their application to other persons or sets of circumstance shall not be affected thereby, it being the intent of the City Council in adopting this Ordinance that no portion thereof or provision, or regulation contained herein, shall become inoperative or fail by reason of any unconstitutionality of any other portion hereof and all provisions of this Ordinance are declared to be severable for that purpose.

Section VI.

The City Secretary is instructed to post and publish notice of this Ordinance as required by law, by publishing only the descriptive caption.

PASSED AND APPROVED this 23rd day of January, 2007.

THE CITY OF FULSHEAR, TEXAS

By: Jamie W. Roberts
JAMIE W. ROBERTS
Mayor

ATTEST:
By: D. Gordon Offord
D. GORDON OFFORD
City Secretary

ALDERMEN VOTING:

BILL ARCHER	yes
J.B. COLLINS	yes
LAVERNE PATTERSON	yes
DENNIS CLACK	yes
CARL G. UTLEY	yes

a:\Trendmaker Petition Ordinance
ClearGreenOrdinanceDisk

Petition for Annexation of Property into the Corporate Limits of the City of Fulshear, Texas

The KATY INDEPENDENT SCHOOL DISTRICT, a political subdivision of the State of Texas ("Petitioner") represent that it is the owner of that certain tract of land containing 123 acres, more or less, (the "Tract") located within the extraterritorial jurisdiction of the City of Fulshear, Texas (the "City").

Petitioner hereby petitions the City to annex the Tract into its corporate limits for all purposes. A description of this land is attached hereto as Exhibit "A" and made a part hereof.

It is the intent of the Petitioner that this annexation occur in accordance with subchapter C-1 of Chapter 43 of the Texas Local Government Code, titled Annexing Procedure for Areas Exempted from Municipal Annexation Plan, having fallen under the exception stated in Sect. 43.052(h), Texas Local Government Code for annexations in accordance with an annexation plan.

Petitioner hereby certifies that there are currently no residents of voting age residing on the Tract.

[EXECUTION PAGES FOLLOW]

Executed this 15th day of December, 2006.

KATY INDEPENDENT SCHOOL DISTRICT
a political subdivision of the State of Texas

By: Judith Snyder
Name: Judith Snyder
Title: Board President

THE STATE OF TEXAS §
§
COUNTY OF HARRIS §

This instrument was acknowledged before me on the 15th day of December, 2006, by Judith Snyder, as Board President of KATY INDEPENDENT SCHOOL DISTRICT, a political subdivision of the State of Texas, on behalf of said political subdivision.

SHARON NOWAK
NOTARY PUBLIC
State of Texas
Comm. Exp. 09-16-2008

(NOTARY SEAL)

Sharon Nowak
Notary Public, State of Texas

CITY OF FULSHEAR
KATY I.S.D. SCHOOL SITE
ANNEXATION TRACT
123.00 ACRES

DECEMBER 8, 2006
JOB NO. 16901-60

DESCRIPTION OF A 123.00-ACRE TRACT OF LAND
SITUATED IN THE
J.W. SCOTT SURVEY, ABSTRACT 321
AND THE
A.G. SHARPLESS SURVEY, ABSTRACT 322
PARTIALLY IN THE CITY OF FULSHEAR
FORT BEND COUNTY, TEXAS

BEING 123.00 acres of land situated in the J.W. Scott Survey, Abstract Number 321 and the A.G. Sharpless Survey, Abstract Number 322, Fort Bend County, Texas and being a portion of a called 123.09 acre tract of land described in an instrument filed for record under Fort Bend County Clerk's File Number 2006066386, said 123.00 acre tract of land being more particularly described by metes and bounds as follows:

Bearing orientation is a GPS derived grid bearing referenced to the Texas State Plane Coordinate System, South Central Zone (4204) NAD-83 and a call of S 87° 48' 46" W along the south line of a called 209.8496 acre tract of land described in a deed filed for record under Fort Bend County Clerk's File Number 2000072486 and monumented on the ground at the east end with a 1/2-inch iron pipe and at the west end with a 3/4-inch iron pipe. Distances shown hereon are surface measured distances. To convert surface distances to grid distances, divide the surface distance by a combined factor of 1.00011497.

COMMENCING at a 5/8-inch iron rod having a grid coordinate of X= 2,969,332.53, Y=13,823,530.19 found for the most easterly northeast corner of a called 1030.03 acre tract of land described in an instrument filed for record under Fort Bend County Clerk's File Number 2005115742 and the southeast corner of a called 2.00 acre tract described in an instrument filed for record under Volume 1589, Page 776 of the Fort Bend County Deed Records, same being in the west right-of-way line of Farm-to-Market Road 1463 (100-foot width as monumented on the ground, Volume 275, Page 525 of the Fort Bend County Deed Records (west 50-feet) and from which a 3/4-inch iron pipe found bears N 26° 07' W, 1.47 feet;

THENCE S 87°48'46" W, at a distance of 295.16 feet pass a 1/2-inch iron pipe found for the southwest corner of said 2.00 acre tract and the most southerly southeast corner of a called 209.8496 acre tract of land described in an instrument filed for record under Clerk's File Number 2000072486 of the Official Public Records of Fort Bend County Deed Records and continuing along a north line of said 1030.03 acre tract and the south line of said called 209.8496 acre tract for a total distance of 1647.38 feet to the **POINT OF BEGINNING;**

THENCE S 02°11'14" E, a distance of 570.00 feet to a point for corner;

THENCE S 04°59'14" W, a distance of 240.00 feet to a point for corner;

THENCE S 13°56'17" W, a distance of 238.54 feet to the beginning of a non-tangent curve to the right;

In a northwesterly direction, along said curve to the right a distance of 55.71 feet, having a radius of 2950.00 feet, a central angle of 01°04'55" and a chord which bears N 61°06'14" W, 55.71 feet to a point of reverse curvature;

In a westerly direction, along a curve to the left, a distance of 1134.60 feet, having a radius of 1050.00 feet, a central angle of 61°54'45" and a chord which bears S 88°28'52" W, 1080.20 feet to a point for corner in the northeasterly line of a called 80-foot wide Houston Lighting and Power Company Easement described in Volume 431, Page 365-367 of the Fort Bend County Deed Records;

THENCE N 67°41'25" W, a distance of 833.16 feet along the northeasterly line of said 80-foot wide Houston Lighting and Power Company Easement to a point for corner;

THENCE N 04°40'14" E, a distance of 276.18 feet to the beginning of a tangent curve to the left;

In a northerly direction, along said curve to the left, a distance of 1544.85 feet, having a radius of 1900.00 feet, a central angle of 46°35'10" and a chord which bears N 18°37'21" W, 1502.65 feet to a point for corner;

THENCE N 01°46'29" W, a distance of 134.16 feet to the beginning of a non-tangent curve to the left;

In a northerly direction, along said curve to the left, a distance of 1157.81 feet, having a radius of 885.00 feet, a central angle of 74°57'29" and a chord which bears N 03°17'46" E, 1076.99 feet to a point of reverse curvature;

In a northerly direction, along a curve to the right, a distance of 37.76 feet, having a radius of 25.00 feet, a central angle of 86°32'06" and a chord which bears N 09°05'05" E, 34.27 feet to a point for corner;

THENCE N 52°21'08" E, a distance of 75.88 feet to the beginning of a tangent curve to the right;

In a northeasterly direction, along said curve to the right, a distance of 240.62 feet, having a radius of 1830.00 feet, a central angle of 07°32'01" and a chord which bears N 56°07'09" E, 240.45 feet to the beginning of a non-tangent curve to the right whose radius point bears S 54° 29' 41" W, a distance of 1225.00 feet;

In a southeasterly direction, along said curve to the right, a distance of 537.61 feet, having a radius of 1225.00 feet, a central angle of 25°08'43" and a chord which bears S 22°55'58" E, 533.31 feet to a point for corner;

THENCE N 71°31'06" E, a distance of 468.41 feet to a point for corner;

THENCE S 79°46'03" E, a distance of 594.00 feet to a point for corner;

THENCE N 88°51'09" E, a distance of 365.75 feet to a point for corner in the east line of said 1214.62 acre tract and the west line of said called 209.8496 acre tract;

THENCE S 01°58'42" E, a distance of 1973.50 feet along the west line of said called 209.8496 acre tract to a 3/4-inch iron pipe found for the southwest corner of said called 209.8496 acre tract and a reentrant corner of said called 123.09 acre tract;

THENCE N 87°48'46" E, a distance of 420.34 feet to the **POINT OF BEGINNING** and containing 123.00 acres of land.

(NOTE: 0.09 acres of said 123.09 acre tract lies within the existing limits of the City of Fulshear)

This document was prepared under 22 TAC §663.21, does not reflect the results of an on the ground survey, and is not to be used to convey or establish interests in real property except those rights and interests implied or established by the creation or reconfiguration of the boundary of the political subdivision for which it was prepared.

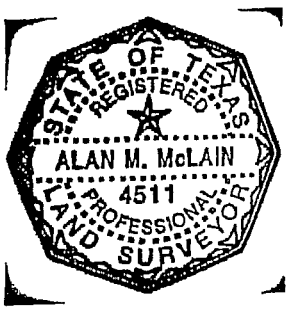

Alan M. McLain RPLS No. 4511
Brown & Gay Engineers, Inc.
10777 Westheimer Road, Suite 400
Houston, Texas 77042
Telephone: (281) 558-8700

= AREA CURRENTLY WITHIN THE CITY LIMITS OF FULSHEAR

= PROPOSED ANNEXATION AREA

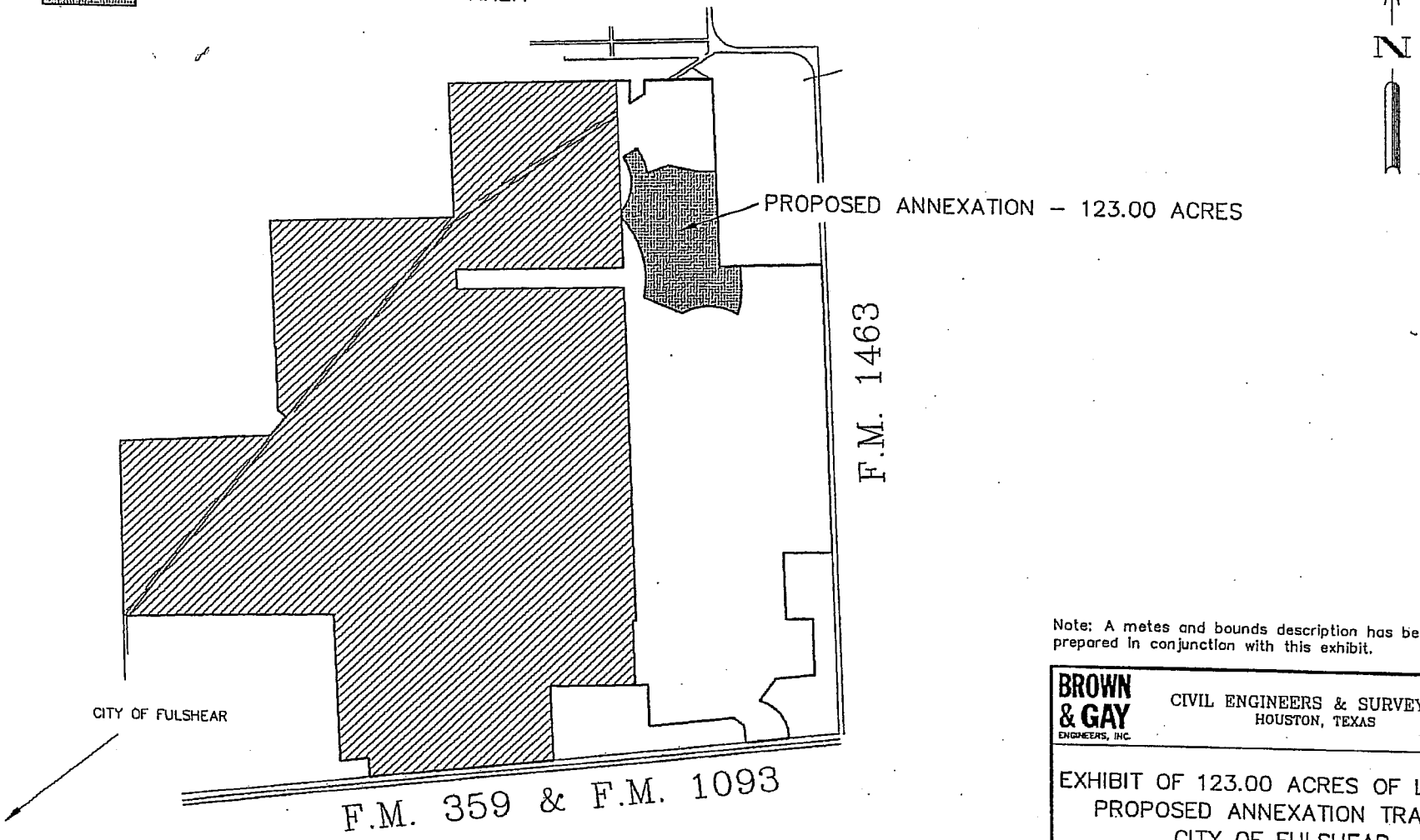

Note: A metes and bounds description has been prepared in conjunction with this exhibit.

BROWN & GAY ENGINEERS, INC.

CIVIL ENGINEERS & SURVEYORS
HOUSTON, TEXAS

EXHIBIT OF 123.00 ACRES OF LAND
PROPOSED ANNEXATION TRACT
CITY OF FULSHEAR
FORT BEND COUNTY, TEXAS

Scale:	Job No.:	Date:	Exhibit:
N.T.S.	16901–60	DEC. 2006	1

r:\projects\bcmud\bcmud169\16901-60\finals\fulshear_annexation_school_tractr.dwg

Ordinance No. 07-952

The orders for Regulation of Outdoor Lighting in the unincorporated areas of Fort Bend County, Texas were adopted on February 20, 2007 for the City Limits of Fulshear and its E.T.J. See the attachment.

APPROVED: _____
Mayor, James W. Roberts

ATTEST: _____
City Secretary, D. Gordon Offord

ALDERMEN:

Archer- yes
Clack- yes
Collins-yes
Patterson-yes
Utley- yes

ORDERS FOR REGULATION OF OUTDOOR LIGHTING IN THE UNINCORPORATED AREAS OF FORT BEND COUNTY, TEXAS

FORT BEND COUNTY ENGINEERING
D. Jesse Hegemier, County Engineer
P. O. Box 1449
1124 Blume Road
Rosenberg, Texas 77471
Phone (281) 633-7510
Fax (281) 342-7366
Web site: www.fortbendcountygov.com

ADOPTED - March 23, 2004
Amendment No. 1 - April 25, 2005
Amendment No. 2 - February 7, 2006
Amendment No. 3 - June 13, 2006
Amendment No. 4 - August 29,2006

[6] TABLE OF CONTENTS

SECTION I	Definitions
SECTION II	Grandfathering of Existing Outdoor Lighting
SECTION III	Exemptions, Amendments, and Variances
SECTION IV	New Lighting: Shielding and Aiming Requirements
SECTION V	New Lighting: Illumination Level Requirements
SECTION VI	New Lighting: General Requirements
SECTION VII	Enforcement
SECTION VIII	Penalties For Violation
SECTION IX	Validity and Severability
SECTION X	Exhibits
SECTION XI	Effective Date

[6] Table of contents and cover page was added by Commissioner Court on June 13, 2006.

ORDERS FOR REGULATION OF OUTDOOR LIGHTING IN THE UNINCORPORATED AREAS OF FORT BEND COUNTY, TEXAS

I.
DEFINITIONS

1.1 In these orders:

a) "Conforming" shall mean the luminaire does meet the requirements for new outdoor lighting as set forth in this ordinance.

b) "Externally illuminated sign or billboard" is any sign or billboard that is lit by a light source external to the sign.

c) "Footcandle" (abbreviated fc) is a unit of measure for illuminance. A one-candela uniform point source of light will illuminate a surface that is everywhere one foot from the point source at one footcandle, which is also equal to one lumen per square foot. Illuminance at an arbitrary distance from a lamp is measured in footcandles by a light meter approved for the given lamp type.

d) "Full Cutoff" (FCO) describes a luminaire light distribution where 100 candela per 1000 lamp lumens (10%) may emit at all vertical angles beginning at 80 degrees up from nadir to less than 90 degrees, and zero candela per 1000 lamp lumens (0%) is allowed at 90 degrees (horizontal plane) and all angles above. This applies to all horizontal angles around the luminaire. A full cutoff luminaire is also fully shielded.

e) "Fully shielded" shall mean a lighting fixture constructed in such a manner that all light emitted by the fixture, either directly from the lamp or a diffusing element, or indirectly by reflection or refraction from any part of the luminaire, is projected below the horizontal plane as determined by photometric test or certified by the manufacturer. A fully shielded fixture is not necessarily full cutoff.

f) "George Observatory" means the public astronomical facility located in Brazos Bend State Park, Fort Bend County, Texas at longitude W95° 35.62' and latitude N29° 22.5'.

g) "Horizontal Illuminance" is the measure of a light source's illuminance measured in footcandles by a light meter at ground level with its light sensor surface oriented horizontally.

h) "Illuminance" is the amount of light falling on a surface and is measured in footcandles.

i) "IESNA" (or "IES") is an acronym for the professional society: Illuminating Engineering Society of North America. The IESNA makes recommendations for outdoor lighting, but does not set outdoor lighting community standards, which are set through local ordinances.

j) "Installed" shall mean the initial installation or replacement of outdoor lighting as defined herein made subsequent to the enactment of these orders.

k) "Internally Illuminated Sign" is a sign with an internal light source where the message area is luminous.

l) "Lamp" is a source of light more commonly known as a bulb.

m) "Light Power Density" for a lit sign or billboard is the connected load of the illumination sources divided by the area of the sign, expressed in Watts/ft^2. A signboard with a message on both front and back has twice the area of a sign facing in one direction.

n)[5] "Lighting Zones" are intended to prevent over or under lighting relative to ambient lighting conditions. Three default lighting zones are defined with increasing ambient light corresponding to geographic descriptions: LZ1 – area adjacent to Brazos Bend State Park and George Observatory as shown on Exhibit 6; LZ2 – the area designated as a buffer zone for the area around LZ1. LZ2 begins at the edge of LZ1 to the County line on the southwest and is bounded on the north by the latitude N29°33' until that line intersects to the northwest a one-half mile distance from US Highway 59's centerline. Then the boundary line will follow the one-half mile distance from US Highway 59's centerline to the western County line. LZ3 - the northern part of the County, from the boundary line
[10] of LZ2 to the northern County line.

o) "Local Street" shall mean any 2-lane street used primarily for direct access to residential, commercial, industrial, or other abutting property. Local streets make up a large percentage of the total street system, but carry a small proportion of vehicular traffic.

p) "Lumen" (abbreviated lm) is a unit of luminous flux. One footcandle is one lumen per square foot. For the purposes of this regulation, the lumen-output values shall be the initial lumen output ratings of a lamp. The lumen rating associated with a given lamp is generally indicated on its packaging or may be obtained from the manufacturer.

q) "Luminaire" is a complete lighting unit consisting of a lamp or lamps, together with any reflectors, refractors, diffusers, baffles, lenses, or other devices to distribute the light, and with parts to position and protect the lamp and to connect the lamps to the power supply. Also known as a light fixture.

r) "Maintained illuminance" means that ground illumination will not fall below this minimum level as the lamp or lamps age.

s) "Nadir" is the direction pointing vertically down from the lowest light emitting part of the luminaire (see Exhibit 3 for an example).

t) "Night" shall mean the period of time between 30 minutes after sunset to 30 minutes before sunrise.

u) "Nonconforming" shall mean the luminaire does not meet the requirements for new outdoor lighting as set forth in this ordinance.

v) "Open sky" means any direction above the horizontal plane that is not blocked by obstacles such as trees, buildings, houses, flags, etc.

w) "Outdoor lighting" means any type of lighting, fixed or movable, designed or used for outdoor illumination of building or homes, including lighting for billboards, streetlights, searchlights used for advertising purposes, externally or internally illuminated on or off-site advertising signs, and area-type lighting. It does not include lighting equipment,

[5] Definition of "Lighting Zones" was revised, and removal of "Rural Areas" and "Urban areas" was amended by Commissioners Court on June 13, 2006.
[10] Definition of "Lighting Zones" was revised to chg. 4 lighting zones to 3 &to delete the last sentence. It was amended by Commissioners Court on August 29, 2006.

required by law to be installed on motor vehicles or lighting required for the safe take-off and landing of aircraft. Nor does it include lighting used for road construction or emergency purposes.

x) "Outdoor recreation facilities" shall mean an open-air arena, stadium, playing field or similar facility primarily used to host sporting events and that is open to the general public and includes an area for spectators.

y) "Panel sign" means an internally illuminated sign built in a regular shape, with a continuous translucent message panel.

z) "Partially shielded" shall mean that those fixtures shall be shielded in such a manner that the bottom edge of the shield is below the plane centerline of the light source (lamp), minimizing light above the horizontal plane.

aa) "Regulated area" shall mean all territory within Fort Bend County that is unincorporated.

bb) "Semi-cutoff" (SCO) describes a luminaire light distribution where the candela per 1000 lamp lumens does not numerically exceed 50 (5%) at or above an angle of 90 degrees above nadir, and 200 (20%) at or above a vertical angle of 80 degrees above nadir. This applies to all horizontal angles around the luminaire.

cc) "Sign area" is the illuminated area of the sign expressed in square feet. The area of a panel sign includes all the area of the message panel. The area of a multifaceted sign is calculated perpendicular to each face or planar surface.

dd) "Uniformity ratio" shall mean the ratio of the average illumination to minimum illumination for the designated lighted area. For example, a 4:1 uniformity ratio means that the lowest level of illumination should be no less than 25% (or 4 times less) of the average level of illumination for the area. Light uniformity is important to night vision since the eye can adapt quickly to only a narrow range of illumination at any one time.

ee) "Veiling luminance" (also known as disability glare) is a luminance produced by bright sources in the field-of-view superimposed on the image in the eye reducing contrast and hence visibility. The "veiling luminance ratio" in the IES method uses the maximum value of Veiling Luminance divided by the Average Pavement Luminance as a measure of the disability glare produced by a lighting system.

ff) "Vertical Illuminance" is the measure of a light source's illuminance in footcandles by a light meter with its light sensor surface oriented vertically at five feet above the ground and facing the light source.

II.
GRANDFATHERING OF EXISTING OUTDOOR LIGHTING

2.1 All outdoor lighting existing and in place prior to the effective date of this light ordinance are grandfathered.

2.2 Except for lamp replacement only, no grandfathered luminaire may be repaired and/or modified to perpetuate its existence unless the repair and/or modification maintains conformance or makes the grandfathered luminaire conforming. If a lamp is available that makes a grandfathered

luminaire conform, or progress towards conformance, to the ordinance's required illuminance level, then such a lamp must be utilized when the lamp is replaced.

2.3 A luminaire replacing or supplementing a grandfathered luminaire must conform to the requirements for new outdoor lighting as stated in this ordinance.

2.4 Grandfathered spotlights and floodlights, with a total luminous flux greater than 1800 lumens, elevated above the ground on poles or buildings and used for area lighting must be adjusted so that their axis of illumination is at an angle not greater than 20 degrees measured from the vertical line between the fixture and the ground (see Exhibits 1 and 2). This subsection applies only to spotlights and floodlights with adjustable mounts and does not apply to outdoor recreational facilities.

2.5 Outdoor Recreational Facilities: No outdoor recreational facility shall be illuminated by nonconforming means from 11 PM local time to sunrise except to conclude a specific recreational activity already in progress.

2.6 Outdoor Display Lighting: Display lighting using nonconforming grandfathered outdoor luminaires with metal halide bulbs must not be used for security lighting after 11 PM local time to sunrise (or after closing hours if before 11 PM local time to sunrise).

2.7 An owner of a grandfathered luminaire may replace or modify the luminaire so that it conforms to this light ordinance if requested by the George Observatory staff or a designated county official. However, the replacement or modification of the luminaire must be provided at no cost to the owner including materials and labor. For example, a grandfathered mercury-vapor outdoor light may be retrofitted with a light shield to make it fully shielded.

III.
EXEMPTIONS, AMENDMENTS, AND VARIANCES

3.1 This ordinance shall not apply to the following:

a) Decorative holiday lighting from November 15 through the next January 15;
b) Lighting required by law to be installed on surface vehicles and aircraft;
c) Airport lighting required by law;
d) Publicly-owned traffic signs, or emergency information signs;
e) Signs for historic landmarks, where signage is using historic lighting technology;
f) Temporary emergency lighting;
g) Temporary lighting other than security lighting at construction projects.

3.2 Amendments to this ordinance may be made by Commissioners Court through normal public process, with an opportunity for public comment and review, before adopting the amendments. Amendments may be made in response to changes in local conditions, and/or changes that occur in the lighting recommendations of nationally recognized organizations such as the IESNA.

3.3 Any individual may submit a written request to the County Judge or designated official for a temporary exemption from the requirements of these orders: The request for the exemption shall contain as a minimum the following information:

a) Proposed use of outdoor light involved.
b) Type of lamp to be used, including manufacturer's part number.

c) Type of light fixture used, including manufacturer's model number and specification (cut) sheets indicating photometric distribution data stated in isofootcandle diagrams.
d) Initial lumens of lamp or lamps.
e) Proposed location of outdoor light.
f) Starting and ending dates for temporary exemption.
g) Contact information including name of requester, affiliation (if applicable), address and telephone number.

3.4 Lighting zone LZ1 designated for the Brazos Bend State Park shall be extended to areas outside of the state park as depicted in Exhibit 6 in Section 10 of this ordinance. The extended area is bounded by latitude N29° 26' on the north side and longitude W95° 44' on the west, and by the Fort Bend/Brazoria county line to the east and south.

3.5 [1] a) Master Planned Developments with plats and sections of development approved by Commissioners Court prior to the March 23, 2004 adoption of the initial Regulations may install non-conforming post-top ornamental luminaires within the Master Planned Development. However, the installer of the non-conforming luminaires must utilize post-top ornamental luminaires in the developer's selected style and daytime appearance that produce the least amount of fixture uplight above the horizontal plane. All non-conforming post-top ornamental luminaries must be approved by Fort Bend County Engineering Department. [11]

b) Conforming post-top ornamental luminaires may be repaired. Non-conforming post-top ornamental luminaires may have minor components, such as, but not limited to, lamp, starter kit, and photo eye replaced or repaired. Additionally, non-conforming post-top ornamental luminaires may have major components such as, but not limited to, ballasts, capacitors, and refractors/globes replaced or repaired, provided that the optics are first upgraded to any available optics that will result in the least amount of fixture uplight above the horizontal plane while maintaining the style and daytime appearance of the luminaire.

IV.
NEW LIGHTING: SHIELDING AND AIMING REQUIREMENTS

4.1 The following applies to outdoor luminaires utilizing any lamp type with a total luminous flux less than or equal to 1800 lumens:

a) Shielding not required but highly recommended.
b) Luminaires for area lighting that produce focussed light beams (such as, but not restricted to, floodlights and spotlights) must be aimed so that no part of the manufacture's stated angular beam width radiates directly into the open sky above the horizontal plane.
c) Luminaires for landscape, architectural, or flag lighting must utilize a focussed light beam and be aimed at the intended target so as to minimize stray light radiating directly into the open sky.

4.2 The following applies to outdoor luminaires with a total luminous flux greater than 1800 lumens:

a) Except for landscape lighting, architectural lighting and flag illumination, an outdoor luminaire with a total luminous flux greater than 1800 lumens must be shielded according to lamp type as set forth in the following table:

[1] Section 3.5 added to Ordinance by Amendment approved by Commissioners Court on April 26, 2005.
[11] Section 3.5 a) The entire paragraph was replaced by Amendment approved by Commissioners Court on August 29, 2006.

SHIELDING REQUIREMENTS FOR LUMINAIRES WITH A TOTAL LUMINOUS FLUX GREATER THAN 1800 LUMENS

LAMP TYPE	SHIELDING
Low Pressure Sodium	Fully
Mercury Vapor	Fully
High Pressure Sodium	Fully
Fluorescent	Fully
Metal Halide	Fully
Halogen (Quartz)	Fully
Induction	Fully
Xenon	Fully
Incandescent	Fully
Fossil Fuel	Partially
Glass Tubes Filled With Neon, Argon, or Krypton	Partially
Other Sources	As Approved By The Authority Assigned by Commissioners Court

b) Outdoor luminaires with lamps requiring full shielding according to Subsection 4.2 Paragraph (a) must be aimed so as to prevent direct radiation of light into the open sky at any angle above the horizontal plane. Lamps requiring partial shielding according to Subsection 4.2 Paragraph (a) must be aimed so as to minimize direct radiation of light into the open sky at any angle above the horizontal plane.

c)[12] Architectural and landscape illumination: Luminaires must be shielded so as to illuminate only the intended target, which if not possible, then the lighting is restricted to illuminating the intended target such that no stray light passes above the horizontal plane. All architectural and landscape illumination, excluding those used in a residential homes, shall be turned off or reduced to minimum security levels between 11:00 pm local time to sunrise by the use of automatic timing equipment.

d) Flag illumination: Luminaires must be shielded so that light illuminates only the area about the flag pole in which the flag flies and at the illumination level specified in Subsection 5.6.

e) Externally illuminated signs and billboards can use a maximum of two luminaires per board that are mounted with the refractor face down and fully shielded according to IESNA standards. All luminaires will use a borosilicate prismatic glass that will direct the light to only illuminate the intended bulletin or poster face.

f) Spotlights and floodlights elevated above the ground on poles or buildings and used for area lighting must be adjusted so that their axis of illumination is at an angle not greater than 20 degrees measured from the vertical line between the fixture and the ground. This does not apply to outdoor recreational facilities addressed in Subsection 6.8. (Reference Section 10, Exhibits 1 and 2.)

g)[13] All standard streetlights must utilize full cutoff optics (FCO) type luminaires that are installed level to the ground in two intersecting perpendicular planes (see Exhibit 4),

[12] Section 4.2 c) sentence 2 was added by amendment approved by Commissioners Court on August 29, 2006.
[13] Section 4.2 g) was revised by amendment approved by Commissioners Court on August 29, 2006.

should be horizontally level in all directions. Local street lighting must conform to the illuminance level in Subsection 5.2. Refer to Section 4.2 (g) for ornamental street lighting.

New ornamental street lights must be classified as either IES "Full Cutoff' or IES "Cutoff" as determined by a valid photometric report. Furthermore, ornamental street lights shall be used that conform to the following total zonal fixture uplight for Zone 90-180 degrees (also known as the hemisphere above the horizontal plane) varying by Lighting Zone:

LZl : 0.0% total zonal fixture uplight (IES Full Cutoff Only)
LZ2: 0.5% or less total zonal fixture uplight (IES Full Cutoff or Cutoff)
LZ3: 2.0% or less total zonal fixture uplight (IES Full Cutoff or Cutoff)

A valid photometric report must be generated for the specified model by a qualified testing lab (testing to IES standards) and must include a full vertical evaluation up through 180 degrees, otherwise that fixture shall be considered to emit 100% zonal fixture uplight. All fixtures without lab-generated photometric reports available shall be considered to emit 100% zonal fixture uplight.

h) Outdoor sales and gas station canopies must utilize canopy lights that are fully recessed into the canopy or are fully shielded by the canopy.

V.

NEW LIGHTING: ILLUMINATION LEVEL REQUIREMENTS

5.1 [2] The following maintained illuminance levels shall not exceed the following values for parking lots and parking areas.
[14]

Parking Areas

Lighting Zone	Average Maintained Illuminance	Max. /Min. Ratio	Avg. /Min. Ratio
LZ1	1.5 fc	12.5:1	7.5:1
LZ2	2.0 fc	16.5:1	10.0:1
LZ3	3.0 fc	10.0:1	6.0:1

Entrance Drives at Parking Areas (if applicable)

Lighting Zone	Average Maintained Illuminance	Max. /Min. Ratio	Avg. /Min. Ratio
LZ1	0.5 fc	10:1	4.0:1
LZ2	1.0 fc	10:1	4.0:1
LZ3	1.5 fc	10:1	4.0:1

Note: Exhibit 5 provides an example of locations where maximum and minimum spot illuminances may occur for a regular grid of luminaires as found in a parking lot or area.

[2] Section 5.1 was amended by Commissioners Court on February 7, 2006.
[14] Section 5.1 was amended by Commissioners Court on August 29, 2006.

a) The average illuminance values shall be calculated on a 10 ft. x 10 ft. grid.
b) Landscape areas and other un-paved areas shall not be included in the calculations.
c) If a separate entrance or circulation drive is included, a separate calculation shall be provided.
d) Facilities with multiple parking areas should be separated into zones with a separate calculation for each zone.
e) All calculations will be done using only the light contribution from the parking lot lights.
f) Light trespass will be limited to a maximum of 0.5 horizontal fc at grade at a distance of 20 feet beyond the property lines.

5.2 [3] Local Street lighting:

a) Local streets are not required to have streetlights. However, this subsection regulates the illumination levels for streetlights that are installed on any local street.

b) Local street light illumination must follow the guidelines in paragraph (d) of this subsection unless a licensed professional engineer trained and experienced in the science of illumination engineering deems other illumination levels more appropriate for existing conditions.

c) The streetlights must conform to the shielding requirements in Subsection 4.2, paragraph (g).

d) The average maintained illuminance and average/minimum uniformity ratio for roadway lighting of local streets shall be used in conjunction with a veiling luminance ratio of no greater than 0.4 and shall not exceed the levels in the following table:

15

Lighting Zone	Ambient Light	Pedestrian Conflict	Avg. Maintained Illuminance		Uniformity Ratio Average/Minimum
			Portland Cement Concrete Road	Asphalt Road	
LZ1	DARK	LOW	0.2 fc	0.3 fc	6.0:1
LZ2	LOW	LOW	0.3 fc	0.4 fc	6.0:1
LZ3	MEDIUM	MEDIUM	0.5 fc	0.7 fc	6.0:1

5.3 Service stations and other fueling facilities:

a) Except for identification signs such as logos, lighting at service stations shall not be used with the intent of attracting customers.
b) The following average maintained illuminance levels for service stations must not be exceeded:

Service Station Component	Lighting Zones: LZ1, LZ2	Lighting Zones: LZ3 [16]
Approach	1.5 fc	2.0 fc
Driveway	1.5 fc	2.0 fc
Pump Island	5.0 fc	10.0 fc
Building Facade	2.0 fc	3.0 fc
Service Areas	2.0 fc	3.0 fc
Landscape Highlights	1.0 fc	2.0 fc

[3] Section 5.2 was amended by Commissioners Court on February 7, 2006.
[15] Section 5.2 table was amended to remove LZ4 by Commissioners Court on August 29, 2006.
[16] Section 5.3 table was amended to remove LZ4 by Commissioners Court on August 29, 2006.

c) Pump island canopy lights must meet the shielding requirements of Subsection 4.2, Paragraph (h), as well as the illumination level cited for "pump island" in Subsection 5.3, Paragraph (b). A uniformity ratio (average maintained illuminance to minimum maintained illuminance) of no greater that 8:1 is recommended beneath the canopy.

d) Floodlights and spotlights must follow the aiming requirements established in Section 4.

e) Advertising signs must meet the shielding criteria in Section 4 and Subsection 5.5.

5.4 [17] Permanent outdoor merchandise sales and storage lots utilizing night lighting. *

a) Sales lots must not exceed the following average maintained illumination levels:

	Lighting Zone: LZ1		**Lighting Zone: LZ2**		**Lighting Zones: LZ3**	
Sales and Storage Lot Component	Average Maintained Illumination Level	Maximum/ Minimum Ratio	Average Maintained Illumination Level	Maximum/ Minimum Ratio	Average Maintained Illumination Level	Maximum/ Minimum Ratio
Front Merchandise **display along public right of ways**	3.0 fc	5.0:1	5.0 fc	5.0:1	10 fc	5.0:1
Other display areas and entrances	2.0 fc	10:1	2.5 fc	10:1	5.0 fc	10:1
Entrance drives	0.5 fc	10:1	1.0 fc	10:1	1.5 fc	10:1

* Note: After closing hours, light levels shall be reduced to minimum-security levels. (*Refer to 6.10*)

b) Lots in lighting zone LZ1 must not be constructed from Portland cement due to its high reflectance unless approved by Commissioners Court. The recommended construction material for lots in LZ1 is bituminous concrete, better known as asphalt, to minimize reflected light from the lot surface.

5.5 [19] Outdoor Lighting of Signs and Billboards:

a) Externally illuminated signs and billboards will follow the luminaire and shielding requirements specified in Subsection 4.2, Paragraph (e). The lamp and ballast watts will not exceed the following lighting power densities in Watts/ft^2 of board face:

Lighting Zone: LZ1	**Lighting Zone: LZ2**	**Lighting Zone: LZ3**
1.2 W/ ft^2	1.4 W/ ft^2	2.0 W/ ft^2

b) Internally illuminated panel signs must not exceed a lighting power density of 11.5 Watts/ft^2 when covered by a colored lexon or by a plastic type material. Time restrictions on internally illuminated panel signs are stated in Subsection 6.4.

5.6 A flag flying at night will be considered properly illuminated as long as flag is minimally visible.

[17] Section 5.4 was amended by Commissioners Court on August 29, 2006.

[19] Section 5.5 table was amended to remove LZ4 by Commissioners Court on August 29, 2006.

VI.
NEW LIGHTING: GENERAL REQUIREMENTS

6.1 Street Lighting: A proposed subdivision or any new street light installation, including any new street lighting installation by existing subdivisions, shall utilize only full cutoff optics (FCO) street lighting in accordance with the standards set in Sections 4 and 5. On projects where an engineer or architect is required, the developer, lighting engineer or architect shall verify in writing to the designated county representative that all street lighting was installed in accordance with this ordinance.

6.2 Parking Lot Lighting: The installation of parking lot lighting must conform to the shielding and maximum illuminance levels in Sections 4 and 5.

6.3 All mercury vapor luminaires with a total luminous flux greater than 1800 lumens must be fully shielded.

6.4 Internally illuminated panel signs with translucent letters and symbols on an opaque background have no operational time restrictions, but should be strongly considered as unnecessary lighting under Subsection 6.10. Internally illuminated panel signs with dark letters and symbols on a white background fall under the category of unnecessary lighting in Subsection 6.10.

6.5 Searchlights, lasers, or any similar high-intensity light are not permitted, except in emergencies where temporary lighting is needed by police, emergency medical technicians, and fire personnel; or for meteorological data gathering purposes.

6.6 Tower and Structure Lighting: Unless otherwise required by the FCC or FAA, tower or other structures requiring obstruction lighting at night shall be of the minimum luminous intensity oscillating red in color.

6.7 All light fixtures, except traffic signals, shall be located, aimed or shielded so as to minimize visible glare and stray light trespassing across property boundaries where the luminaire(s) are installed.

6.8 New Recreational Facilities: Illumination for new outdoor recreation facilities must conform to the requirements of Section 4 except when such shielding would interfere with the intended activity. For such facilities, partially-shielded luminaires are permitted as a substitute for full shielding. Examples of activities where partially-shielded luminaires are permitted as a substitute include, but are not limited to, baseball, softball, football and rodeo arenas. Specifically, tennis, volleyball, racquetball and handball courts and swimming pools must utilize fully-shielded luminaires if required under Section 4. All light fixtures must also conform to the requirements of Subsection 6.7 regarding light trespass.

6.9 [18] New Commercial Construction Projects: New construction projects shall include **an Outdoor Lighting Plan that indicates point to point isofootcandle illuminance values to 20 feet beyond the property lines of the site under development.** The County will use the Outdoor Lighting Plan to predetermine conformance to this ordinance. The following information shall be included in the Outdoor Lighting Plan:

a) Proposed use of outdoor light involved.
b) Type of lamp to be used, including manufacturer's part number.

[18] Section 6.9 and 6.9 n) were amended by Commissioners Court on August 29, 2006.

c) Type of light fixture used, including manufacturer's model number and specification (cut) sheets indicating photometric distribution data stated in isofootcandle diagrams.
d) Initial lumens of lamp or lamps and associated maximum light loss factor.
e) Proposed location of outdoor light.
f) Maximum illuminance.
g) Minimum illuminance.
h) Average maintained illuminance for the task area.
i) Uniformity Ratio (average illuminance divided by minimum illuminance). Areas outside of the task area shall not be factored into the uniformity ratio calculation.
j) Illuminance levels at the property line.
k) Aiming and shielding instructions (details) for floodlighting or spotlighting.
l) Luminaire and lamp schedule including total initial lumen output for each fixture.
m) Contact information including name of requester, affiliation (if applicable), address and telephone number.
n) If applicable, include details on the automatic timing sequence used for this site.

6.10[4] After closing hours, businesses shall reduce outdoor lighting between the hours of 11:00 p.m. and sunrise by turning off any necessary lights. Examples of necessary outdoor lighting include lighting associated with flag display, safety, and security. Any business which is open twenty-four (24) hours a day shall comply with the lighting levels set out in Section 5.1 of these Regulations at all times when it is open for business.

VII.
ENFORCEMENT

7.1 A law enforcement officer or any other designated official representing Fort Bend County shall make enforcement of these orders.

7.2 The County shall attach a copy of this ordinance to the plat application and instructions. The applicant shall return a signed copy of the ordinance with the plat application.

VIII.
PENALTIES FOR VIOLATION

8.1 An individual, or business, in violation of this ordinance shall be notified by official written correspondence from the appropriate office of the County. Fines may be assessed against the individual if the lighting violation is not brought into compliance within 90 days. Each day the lighting violation(s) is/are not brought into compliance after the 90 day period has expired, may constitute another offense subject to additional fines.

8.2 Any Commercial Developer or Residential Area Developer found in violation shall be ordered to cease further lighting development until lighting violations are brought into compliance within 90 days. Fines may be assessed against the Commercial Developer, Installation Contractor, or Residential Area Developer if the lighting violations are not brought into compliance within the 90 days.

8.3 Any lighting engineer, lighting designer or consultant, lighting installer, or lighting utility company found in violation of this ordinance, or found contributing to a violation of this ordinance through contractual work, shall be ordered to cease further lighting installations on all projects within Fort Bend County until the lighting violations are brought into compliance with this Ordinance.

[4] Section 6.10 was amended by Commissioners Court on February 7, 2006.

8.4 Any outdoor lighting found in violation that is not brought into compliance with all stipulations of this Ordinance by the owner, contractor, or developer within 120 days after the initial notice of a violation is distributed by the County Official, the County may, at its discretion:

a) Suspend the business activities within the County of the developer or contractor until all luminaires on the property found to be in violation are brought into compliance with this Ordinance.

8.5 The County may not approve any further plat(s), permit(s) or plan(s) for any subdivision that installs new street lighting that does not meet the street lighting standards in Sections 4 and 5.

IX.
VALIDITY AND SEVERABILITY

9.1 Where any provisions of the Texas State Statutes, any federal law, or any companion ordinance conflicts with the requirements of this outdoor light control provision, the more restrictive law or regulation shall govern.

9.2 Validity: If any section, subsection, paragraph, sentence, clause, phrase or provision of these Regulations shall for any reason be held to be invalid or unconstitutional by a decree or decision of any court of competent jurisdiction, such decree or decision shall not affect nor impair the validity of any other section or remaining portion of these Regulations.

9.3 Severability: If any section, subsection, paragraph, sentence, clause, phrase or provision of these Regulations shall for any reason be held to be invalid or unconstitutional, as applied to a particular application or part of an application, by decree or decision of a court of competent jurisdiction, such decree or decision shall be limited to the particular application or part of an application and the general applicability of these Regulations to other applications or part of applications shall not be affected.

X.
EXHIBITS

Exhibit 1

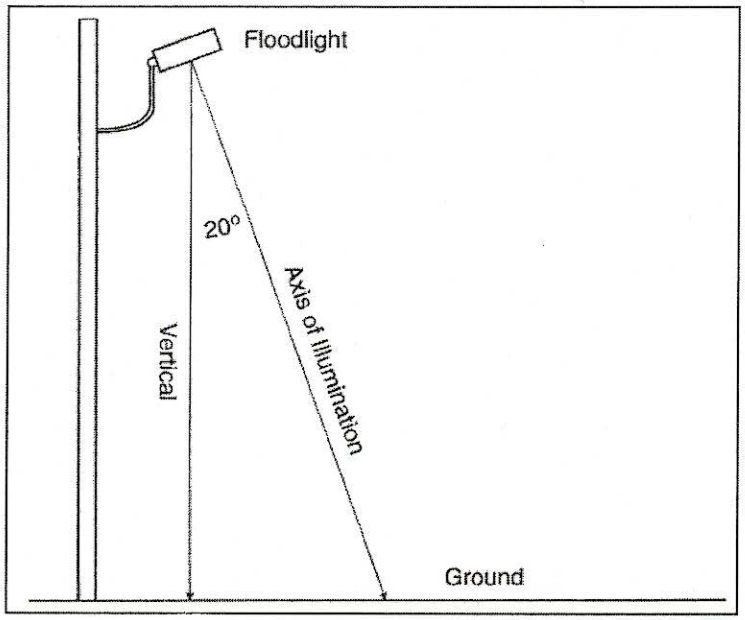

Exhibit 1. See Subsection 4.2 (g) – For spotlights and floodlights mounted overhead and used for area lighting, the axis of illumination shall be adjusted to an angle not more than 20 degrees from the vertical line between the fixture and the ground.

Exhibit 2

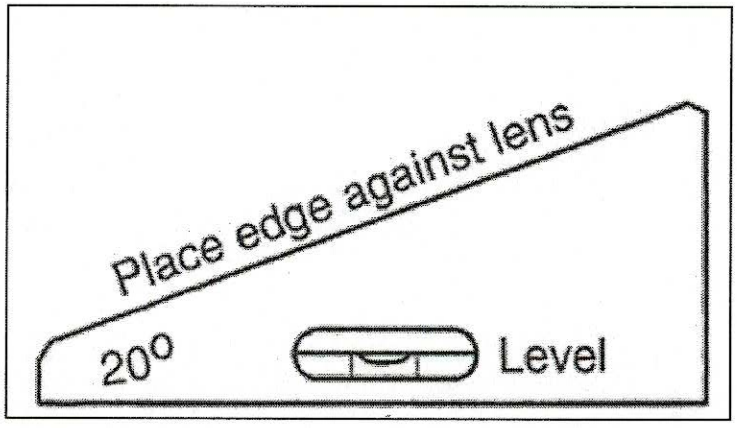

Exhibit 2. A tool for aiming lights as in Exhibit 1, above. Place the upper edge of the tool against the lense and adjust the fixture so that a level parallel to the bottom edge shows level.

Exhibit 3

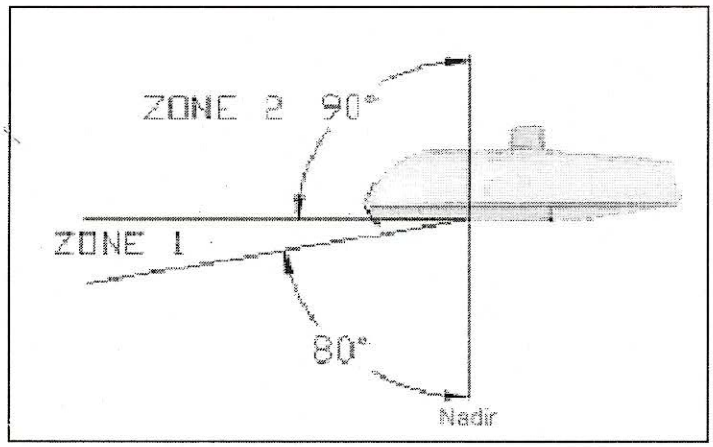

Exhibit 3. Full Cutoff (FCO) luminaire in Subsection 4.2 (g). The FCO luminaire in Zone 1 (beginning at 80 degrees up from nadir to less than 90 degrees) may emit up to 100 candela per 1000 lamp lumens (10%) at all vertical angles. The FCO luminaire in Zone 2 (beginning at 90 degrees up from the nadir (horizontal plane) and all angles above) must emit zero candela per 1000 lamp lumens (0%). This applies to all horizontal angles around the luminaire.

Exhibit 4

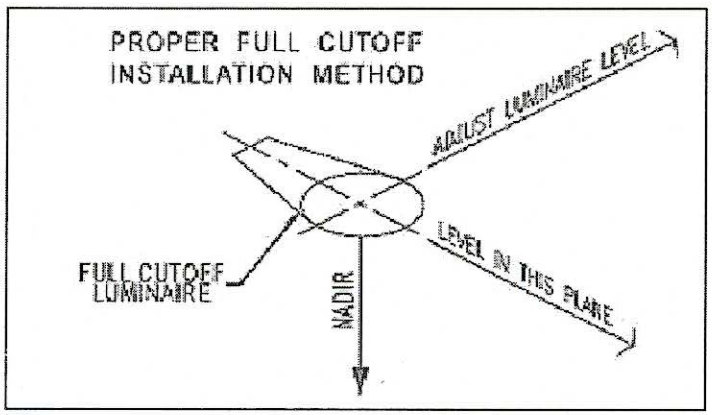

Exhibit 4. The FCO luminaire must be adjusted so that it is horizontally level in two perpendicular directions, each of which is perpendicular to the direction of the luminaire's nadir.

Exhibit 5

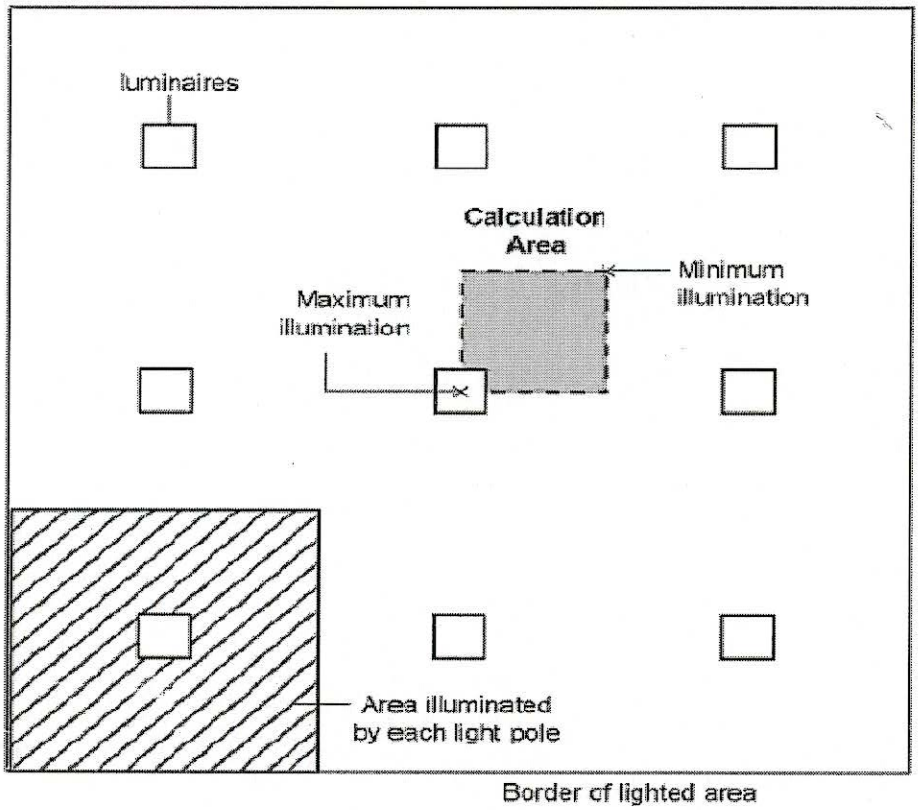

Exhibit 5. Map view of parking lot or parking area indicating luminaire positions, area illuminated by each pole, and points with respect to luminaires where maximum and minimum illumination values occur. From California Energy Efficiency Standards 2005 study on parking lot lighting.

Exhibit 6

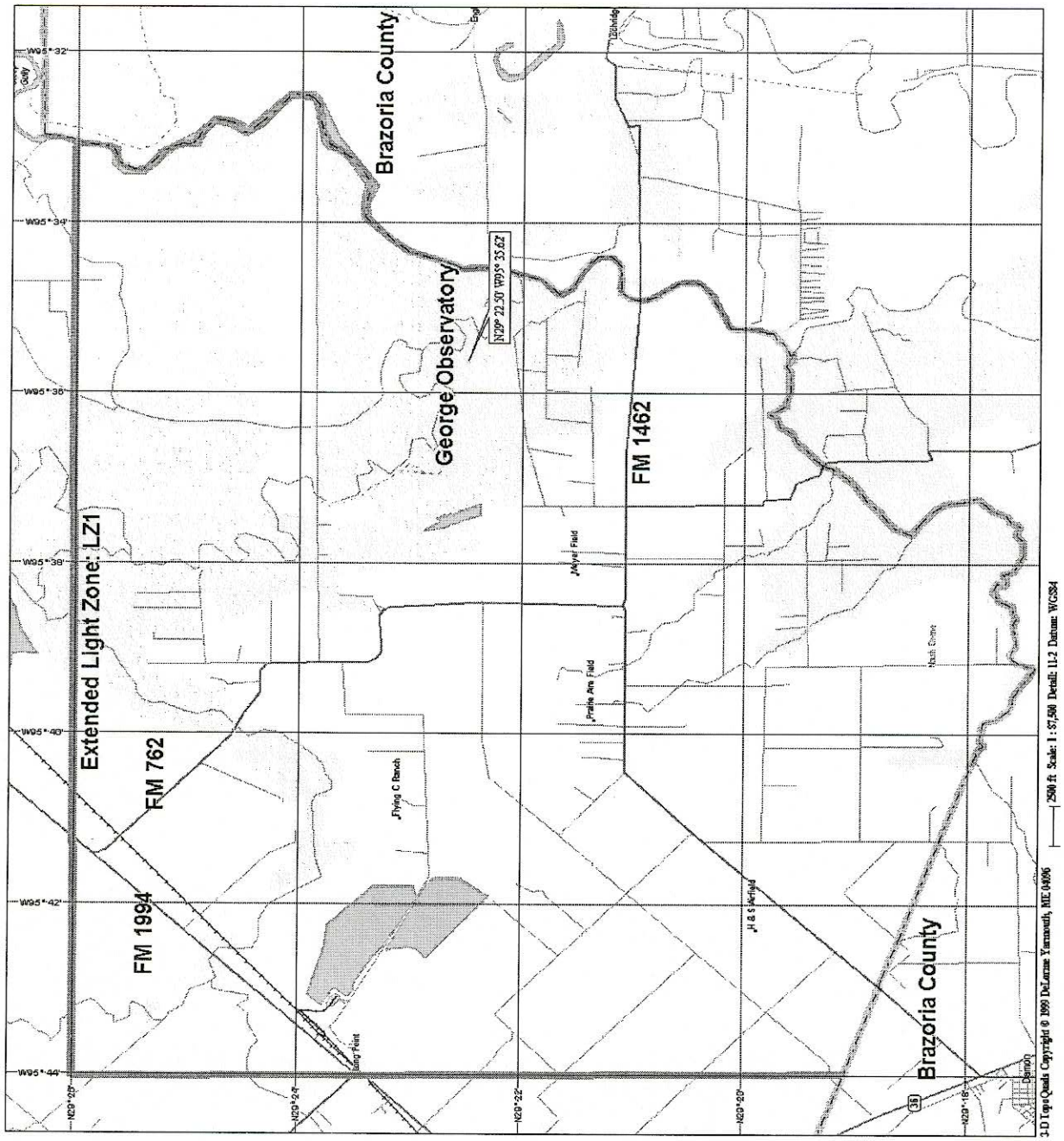

Exhibit 6. Extension of the Brazos Bend State Park lighting zone LZ1 to an area outside of the state park. The extended area is bounded by latitude N29° 26' on the north side and longitude W95° 44' on the west (shown in red), and by the Fort Bend County/Brazoria County line to the east and south.

[7] Exhibit 7

FORT BEND COUNTY LIGHTING ORDINANCE: HOW TO DETERMINE YOUR LIGHT ZONE

1) With your net browser, type the address: http://www.fortbendcountygov.com
2) From header options select "Quick Links".
3) Select "Engineering" from the drop down menu.
4) Select "Engineering Requirements" on the left column.
5) [8] Click on "Outdoor Lighting Zone Map" to view the Lighting Zones in PDF format.

XI.
EFFECTIVE DATE

The effective date of this ordinance shall be March 23, 2004 .
The effective date of Amendment No. 1 shall be April 26, 2005 .
The effective date of Amendment No. 2 shall be February 7, 2006 .
The effective date of Amendment No. 3 shall be June 13, 2006 .
The effective date of Amendment No. 4 shall be August 29, 2006.

[9]

Approved this 29th day of August, 2006.

[7] Exhibit 7 changed to reflect accessing the Outdoor Lighting Zone Map web-site as amended by Commissioners Court on June 13, 2006.
[8] The Outdoor Lighting Zone Map was amended by Commissioners Court on June 13, 2006.
[9] ~~All other conditions paragraph added as amended by Commissioners Court on June 13, 2006.~~ Removed paragraph 8/29/2006.

ORDINANCE NO. 07-953

AN ORDINANCE GRANTING THE PETITION TO CLOSE THE ALLEY IN BLOCK TWO (2) OF THE TOWN OF FULSHEAR, TEXAS.

BE IT ORDAINED BY THE CITY COUNCIL OF THE CITY OF FULSHEAR, TEXAS:

WHEREAS, FULSHEAR II, LTD. has petitioned the City of Fulshear to abandon the alley in block TWO (2) of the Town of Fulshear, Texas, and

WHEREAS, the project and business opportunities will benefit the Citizens and City of Fulshear; and

WHEREAS, the City duly notified all area landowners by posting and publication of the petition to abandon this alley; and

WHEREAS, no one opposed the abandonment of this alley.

KNOW ALL MEN BY THESE PRESENTS; such petition is hereby granted, subject to the terms and conditions set forth herein.

Section I

1. That The City Council officially finds, determines, recites and declares that a sufficient written notice of the date, hour, place and subject of this meeting of the City Council was posted at a place convenient to the public at the City Hall of the City for the time required by law preceding this meeting, as required by the open Meetings Law, Tex.Gov't Code Ann., Ch 551 (Vernon Supp.2004); and that this meeting was open to the public as required by law at all times during which this ordinance and the subject matter thereof was discussed, considered and formally acted upon.
2. The City Council further ratifies, approves and confirms such written notice and the contents and posting thereof.
3. The petition is hereby granted subject to the receipt by the City of Fulshear of the sum of $13,500.00
4. Upon receipt of the sum of $13,500.00 the alley is closed, discontinued, and abandoned, and a reversion thereof is hereby declared to the adjacent landowners, and prayed for in the aforesaid petition.

Section II

This Ordinance shall take effect from and after the date of its passage, and all Ordinances or portion of Ordinances heretofore passed in conflict with the terms hereof are specifically repealed.

Section III

If any provision, section, subsection, sentence, clause, phrase of this Ordinance, or the application of same to any person or set of circumstances is for any reason held to be unconstitutional, void or invalid, the validity of the remaining portions of this Ordinance or their application to other persons or sets of circumstance shall not be affected thereby, it being the intent of the City Council in adopting this Ordinance that no portion thereof or provision, or regulation contained herein, shall become inoperative or fail by reason of any unconstitutionality of any other portion hereof and all provisions of this Ordinance are declared to be severable for that purpose.

Section IV.

The City Secretary is instructed to post and publish notice of this Ordinance as required by law, by publishing only the descriptive caption.

PASSED AND APPRVOED this 20th day of March, 2007.

THE CITY OF FULSHEAR, TEXAS

By: James W. Roberts
JAMES W. ROBERTS
Mayor

Attest:

By: D. Gordon Offord
D. GORDON OFFORD

ALDERMEN VOTING:

BILL ARCHER	Yes
J.B. COLLINS	Yes
LAVERNE PATTERSON	Yes
DENNIS CLACK	Yes
CARL G. UTLEY	Yes

ORDINANCE NO. 07-954

AN ORDINANCE OF THE CITY OF FULSHEAR PROVIDING FOR THE HOLDING OF A GENERAL ELECTION ON MAY 12, 2007, FOR THE PURPOSE OF ELECTING (2) ALDERMEN; TWO PROPOSITIONS AND SUBSTITUTING A NEW SECTION 1 THEREOF TO PROVIDE FOR APPOINTMENT OF A NEW EARLY VOTING CLERK, THE POLLING PLACE FOR EARLY VOTING, THE TIME FOR EARLY VOTING, AND THE DATES FOR EARLY VOTING; AUTHORIZING THE MAYOR AND THE CITY SECRETARY TO EXECUTE AND ATTEST, RESPECTIVELY, TO THE CONTRACT BETWEEN THE CITY AND FORT BEND COUNTY FOR THE CONDUCTION OF A JOINT ELECTION .

* * * * *

BE IT ORDAINED BY THE CITY COUNCIL OF THE CITY OF FULSHEAR, TEXAS:

Section 1. Section 3 of Ordinance 06-937, passed, approved, and adopted on February 15, 2006, is hereby amended by deleting all of Section 3 and substituting therefore a new Section 3 to read as follows:

"**Section 3**. The present boundaries of the City constituting one election precinct, the polls shall be open for voting from seven o'clock (7:00) a.m. until seven o'clock (7:00) p.m. at the following polling place, and the following are hereby appointed officers to conduct the election at said polling place:

POLLING PLACE

Huggins Elementary School

1 Huggins Drive

Fulshear, Texas 77441

ELECTION OFFICERS

as appointed by the County Commissioners of
Fort Bend County, Texas

The City Secretary is hereby authorized and directed to provide a copy of this Ordinance to each judge as written notice of the appointment, as required by Section 32.009 of the TEXAS ELECTION CODE.

The Presiding Judge shall appoint no more than one (1) clerk to assist in the holding of said election. Said election officers shall also serve as the early voting ballot board for such election; and the Presiding Judge of the election precinct shall also serve as the presiding officer of such board. The hourly rate of pay shall be $9.00 and each election officer shall not exceed fourteen (14) hours."

Section 2. Section 5 of Ordinance 06-937, passed, approved, and adopted on February 15, 2006, is hereby amended by deleting all of Section 5 in its entirety and substituting therefore a new Section 5 to read as follows:

"**Section 5**. Early voting and voting on Election Day shall be performed on the eSlate polling place voting system and the Ballot non digital ballot imaging system from Hart InterCivic, Inc., in accordance with the TEXAS ELECTION CODE. All expenditures necessary for the conduct of the election, purchase of materials, and the employment of all election officials are hereby authorized in accordance with the TEXAS ELECTION CODE.

Section 3. Section 1 of Ordinance 06-938, passed, approved, and adopted on March 15, 2006, is hereby amended by deleting all of Section 1 and substituting therefore a new Section 1 to read as follows:

"**Section 4.** Mr. J.R. Perez, Fort Bend County Election Administrator, is hereby appointed clerk for early voting; the appointment of a deputy clerk or clerks for such voting by the City Secretary shall be in accordance with Sections 83.031 et seq. of the TEXAS ELECTION CODE.

Fulshear Precinct 3 Office Building

8100 FM 359

Fulshear, Texas 77441

is hereby designated as the place for early voting for said election. Said clerks shall keep said office open for at least eight (8) hours, that is, from eight o'clock (8:00) a.m. until five o'clock (5:00) p.m., on each day for early voting which is not a Sunday, or an official state holiday, beginning on the twelfth (12th) day (April 30, 2007) and continuing through the fourth (4th) day (May 5, 2007) preceding the date of said election. In addition to the foregoing hours, early voting will be open at the location herein designated from 7:00 a.m. until 7:00 p.m. on Monday, May 7, 2007, and Tuesday, May 8, 2007 and from 12:00 p.m. to 5:00 p.m. on Sunday, May 6, 2007. Said clerks shall not permit anyone to vote early by personal appearance on any day which is not a regular working day for the clerk's office, and under no circumstances shall they permit anyone to vote by personal appearance at any time when such office is not open to the public.

The clerk's mailing address to which ballot applications and ballots voted by mail may be sent is Fort Bend County Elections Administrator, 4520 Reading Road, Rosenberg, Texas 77471. The early voting clerk, in accordance with the provisions of the TEXAS ELECTIONS CODE, shall maintain a roster listing each person who votes by personal appearance and each person to whom a ballot to be voted by mail is sent. The roster shall be maintained in a form approved by the Secretary of State."

Section 4. City Council hereby authorizes and ratifies all actions taken by the City Secretary, Diana Gordon Offord, and the Mayor, Jamie W. Roberts, related to the occurrence of this election, including but not limited to the execution of the contract with Fort Bend County, Texas for the conduct of a joint election between the City of Fulshear and Fort Bend County, Texas.

Section 5. Said election shall be held in accordance with the TEXAS ELECTION CODE and the Federal Voting Rights Act of 1965, as amended.

Section 6. Those portions of Ordinance No. 06-937, passed, approved, and adopted on February 15, 2006, and those portions of Ordinance No. 06-938, passed, approved, and adopted on March 15, 2006, in conflict or inconsistent herewith are hereby repealed. No other provision of the Ordinance No. 06-937 or 06-938 is changed or affected in any way by the adoption of this Ordinance.

PASSED, APPROVED, AND ADOPTED the 20th day of February, 2007.

Jamie W. Roberts
Mayor

ATTEST:

Diana Gordon Offord
City Secretary

ARCHER	AYE
COLLINS	AYE
CLACK	AYE
PATTERSON	AYE
UTLEY	AYE

ORDINANCE No. 07-955

AN ORDINANCE CANVASSING THE RETURNS AND DECLARING THE RESULTS OF THE GENERAL ELECTION HELD ON MAY 12, 2007, FOR THE PURPOSE OF ELECTING TWO (2) ALDERMEN TO THE CTY COUNCIL OF THE CITY OF FULSHEAR.

* * * * * * * * * * * *

WHEREAS, a general election was held in the City of Fulshear, Texas, on May 12, 2007, for the purpose of electing two (2) Aldermen; and

WHEREAS, said election was duly and legally held in conformity with the election laws of the State of Texas, and the results of said election have been verified and returned by the proper judges and clerks; and

WHEREAS, it appears that a total of 205 votes were cast in such election; now, therefore,

BE IT ORDAINED BY THE CITY COUNCIL OF THE CITY OF FULSHEAR, TEXAS:

Section 1. The facts set forth in the preamble of this Ordinance are hereby found to be true and correct.

Section 2. The official canvass of the returns of the general election held on May 12, 2007, reflects that the following named persons received the number of votes set opposite their name:

Candidate Name	Votes
J. B. Collins, Jr.	74
Bill Archer	76
Larry Beustring	55

Section 3. In accordance with the official canvass of the returns of the general election held on May 12, 2007, the following persons are duly elected:

Bill Archer

J. B. Collins, Jr.

PASSED, APPROVED AND ADOPTED this 15th day of May, 2007.

James (Jamie) W. Roberts
Mayor

ATTEST:

Diana Gordon Offord
City Secretary

ORDINANCE NO. 07-_956_____

AN ORDINANCE OF THE CITY COUNCIL OF THE CITY OF FULSHEAR, TEXAS, CANVASSING AND DECLARING THE RESULTS OF AN ELECTION HELD ON MAY 12, 2007, HELD TO DETERMINE WHETHER TO IMPOSE AN ADDITIONAL ONE-HALF OF ONE PERCENT SALES TAX WITHIN THE CITY OF FULSHEAR, TEXAS UNDER THE PROVISIONS OF SECTION 4B OF THE DEVELOPMENT CORPORATION ACT, V.T.C.S. 5190.6.

WHEREAS, on May 12, 2007, an election was held in accordance with Chapter 321 of the Tax Code for the purpose of voting on the adoption of an additional one-half of one percent sales and use tax , and

WHEREAS, the following Proposition A was submitted to the qualified voters of Fulshear, Texas:

> The adoption of a Section 4B sales and use tax in the City of Fulshear at the rate of one-half (1/2) of one percent to undertake any or all projects authorized for Section 4B corporations by Article 5190.6 of the Revised Civil Statues of the state of Texas (Development Corporation Act of 1979, as amended) including, but not limited to projects for the promotion of new and expanded business enterprises, promotion of tourism, development of parks, retail development, job training, learning centers, infrastructure projects such as, but not limited to, streets, roads, water and sewer, and drainage, and related improvements that enhance any authorized project undertaken, along with the cost of operation and maintenance of any such projects.

WHEREAS, the votes cast "For" and "Against" were cast in the following manner:

FOR __78_____

AGAINST ___38____

Therefore approving the said proposition by a margin of __40____ votes

NOW THEREFORE BE IT ORDAINED by the City Council of the City of Fulshear, Texas

THAT, it is ordered and declared that at said election the above stated proposition was adopted, and

THAT, the City Secretary is directed to immediately sent to the State Comptroller, by certified or registered mail, a certified copy of this ordinance, along with a map of the City of Fulshear clearly showing its boundaries, and

THAT, This Ordinance shall be in full force and effect from and after its passage.

PASSED AND APPROVED on this 21st day of May, 2007 by a vote of 4 to 0.

CITY OF FULSHEAR

James (Jamie) W. Roberts, Mayor

ATTEST:

ALDERMEN

Bill Archer-yes
Dennis Clack-absent
J.B. Collins, Jr.-yes
Laverne Patterson- yes
Carl Utley- yes

D. Gordon Offord, City Secretary

ORDINANCE NO. 07-957

AN ORDINANCE OF THE CITY COUNCIL OF THE CITY OF FULSHEAR, TEXAS, CANVASSING AND DECLARING THE RESULTS OF AN ELECTION HELD ON MAY 12, 2007, HELD TO DETERMINE WHETHER TO IMPOSE AN ADDITIONAL ONE-HALF OF ONE PERCENT SALES TAX WITHIN THE CITY OF FULSHEAR, TEXAS UNDER THE PROVISIONS OF SECTION 4A OF THE DEVELOPMENT CORPORATION ACT, V.T.C.S. 5190.6.

WHEREAS, on May 12, 2007, an election was held in accordance with Chapter 321 of the Tax Code for the purpose of voting on the adoption of an additional one-half of one percent sales and use tax , and

WHEREAS, the following Proposition B was submitted to the qualified voters of Fulshear, Texas:

The adoption of sales and use tax for the promotion and development of new and expanded business enterprises at the rate of one-half (1/2) of one percent.

WHEREAS, the votes cast "For" and "Against" were cast in the following manner:

FOR 64

AGAINST 49

Therefore approving the said proposition by a margin of 15 votes

NOW THEREFORE BE IT ORDAINED by the City Council of the City of Fulshear, Texas

THAT, it is ordered and declared that at said election the above stated proposition was adopted, and

THAT, the City Secretary is directed to immediately sent to the State Comptroller, by certified or registered mail, a certified copy of this ordinance, along with a map of the City of Fulshear clearly showing its boundaries, and

THAT, This Ordinance shall be in full force and effect from and after its passage.

PASSED AND APPROVED on this 21st day of May, 2007 by a vote of 4 to 0.

CITY OF FULSHEAR

James (Jamie) W. Roberts, Mayor

ATTEST:

D. Gordon Offord, City Secretary

ALDERMEN

Bill Archer- yes
Dennis Clack- absent
J.B. Collins, Jr. – yes
Laverne Patterson – yes
Carl Utley- yes

ORDINANCE NO. 07-958

AN ORDINANCE DESIGNATING CERTAIN INTERSECTIONS AS STOP INTERSECTIONS: PROVIDING FOR THE ERECTION OF STOP SIGNS AT ONE OR MORE ENTRANCES TO DESIGNATED INTERSECTIONS; PROVIDING FOR A PENALTY AND FINE OF NOT MORE THAN $1,000.00 UPON CONVICTION OF A VIOLATION UNDER THIS ORDINANCE; DECLARING AN EMERGENCY; PROVIDING A SEVERABILITY CLAUSE; PROVIDING AN EFFECTIVE DATE.

WHEREAS, the City wishes to protect and preserve the health and safety of its citizens.

WHEREAS, certain roads, streets, and highways within the City of Fulshear carry more than other highways, and,

WHEREAS, certain intersections within the City require traffic control devices by the erection of stop signs at points entering into said intersections, because of the traffic hazard at said intersections.

NOW, THEREFORE, BE IT ORDAINED BY THE BOARD OF ALDERMEN OF THE CITY OF FULSHEAR, TEXAS:

Section I.

The intersections hereinafter named are hereby expressly designated as stop intersections. A stop sign or stop signs shall be erected and maintained on the streets hereinafter named at their intersection with the streets also named, and every vehicle shall stop at such sign or at a clearly marked stop line before entering the hereinafter designated intersection on the streets hereinafter named, except when directed to proceed by a police officer:

On Wallis Street at Second Street (1)

Section II.

The Mayor is authorized to post and maintain stop signs along highways within the City of Fulshear, displaying the stops provided by this Ordinance to vehicular traffic traveling along such streets, roads, and highways.

Section III. Penalty for Violation of Article

Any person found to be in violation of this Ordinance shall be fined as provided for in the general penalty provision found in this Ordinance unless it be shown that such person has been found guilty before of violation of this same Ordinance, in which case the fine shall be as provided for in the general penalty provision found in this Ordinance. Each day a violation exists shall be a separate offense.

Section IV.

This Ordinance shall take effect from and after the date of its passage, and all Ordinances or portion of Ordinances heretofore passed in conflict with the terms hereof are specifically repealed.

Section V.

If any provision, section, subsection, sentence, clause, phrase of this Ordinance, or the application of same to any person or set of circumstances is for any reason held to be unconstitutional, void or invalid, the validity of the remaining portions of this Ordinance or their application to other persons or sets of circumstance shall not be affected thereby, it being the intent of the City Council in adopting this Ordinance that no portion thereof or provision, or regulation contained herein, shall become inoperative or fail by reason of any unconstitutionality of any other portion hereof and all provisions of this Ordinance are declared to be severable for that purpose.

Section VI.

Any person violating any of the provisions of this Ordinance shall be guilty of a misdemeanor and shall be fined not more than $1,000.00 upon conviction of such violation; provided however if such person convicted of an offense under this Ordinance which offense is also a violation of the penal laws of the State of Texas, such person shall be subject to the penalties set out in the penal laws of the State of Texas for the offense.

Section VII.

The City Secretary is instructed to post and publish notice of this Ordinance as required by law, by publishing only the descriptive caption.

Section VIII.

The fact that certain of the intersections herein named are presently without any traffic control represents a danger to citizens of the City and a hazard to the operation of vehicles within the City causes an emergency, requiring the reading of an ordinance at more than one meeting to be dispensed with, therefore this ordinance shall be passed and approved on the date of its introduction and shall be enforceable from the date of its publication and posting at City Hall.

PASSED AND APPROVED this 29th day of May, 2007.

THE CITY OF FULSHEAR, TEXAS

By: _____
JAMIE W. ROBERTS
Mayor

ATTEST:

By: _____
D. GORDON OFFORD
Acting City Secretary

ALDERMEN VOTING:

BILL ARCHER	YES
J.B. COLLINS	YES
LAVERNE PATTERSON	YES
DENNIS CLACK	YES
CARL G. UTLEY	YES

a:\Fulshear-StopSignOrdinance2
ClearGreenOrdinanceDisk

ORDINANCE NO. 07-959

AN ORDINANCE PROVIDING FOR THE ASSESSMENT, LEVY, AND COLLECTION OF AD VALOREM TAXES OF THE CITY OF FULSHEAR, TEXAS, FOR THE YEAR 2007 AND FOR EACH YEAR THEREAFTER UNTIL OTHERWISE PROVIDED; PROVIDING THE DATE ON WHICH SUCH TAXES SHALL BE DUE AND PAYABLE; PROVIDING FOR PENALTY AND INTEREST ON ALL TAXES NOT TIMELY PAID; PROVIDING FOR SEVERABILITY; AND REPEALING ALL ORDINANCES AND PARTS OF ORDINANCES IN CONFLICT HEREWITH.

* * * * *

WHEREAS, pursuant to Section 26.05 of the Texas Property Tax Code, the governing body of each taxing unit shall adopt a tax rate for the current tax year; and

WHEREAS, all notices and hearings required by law as a prerequisite to the passage, approval, and adoption of said tax rate ordinance have been timely and properly given and held; now, therefore,

BE IT ORDAINED BY THE CITY COUNCIL OF THE CITY OF FULSHEAR, TEXAS:

Section 1. The facts and recitations set forth in the preamble of this Ordinance are found to be true and correct and are hereby adopted, ratified, and confirmed.

Section 2. All property subject to ad valorem taxation by the City of Fulshear, Texas, shall be equally and uniformly assessed for such purposes at One Hundred Percent (100%) of the fair market value of such property.

Section 3. There is hereby levied for general purposes and use by the City of Fulshear, Texas, for the year 2007, and for each year thereafter until otherwise provided, an ad valorem tax at the rate of Twenty and 5921/1000 Cents ($.205921) on each One Hundred Dollars ($100) of assessed valuation on all property, real, personal, and mixed, within the corporate limits upon which an ad valorem tax is authorized by law to be levied by the City of Fulshear,

Texas. The proceeds from such tax shall be applied to the payment of the general and current expenses of the government of the City. All such taxes shall be assessed and collected in current money of the United States of America.

Section 4. All ad valorem taxes levied hereby, as reflected by Section 3 hereof, shall be due and payable on or before January 31, 2008. All ad valorem taxes due the City of Fulshear, Texas, and not paid on or before January 31 following the year for which they were levied shall bear penalty and interest as prescribed in the Property Tax Code of the State of Texas.

Section 5. All ordinances and parts of ordinances in conflict herewith are, to the extent of such conflict, hereby repealed.

Section 6. In the event any clause phrase, provision, sentence, or part of this Ordinance or the application of the same to any person or circumstances shall for any reason be adjudged invalid or held unconstitutional by a court of competent jurisdiction, it shall not affect, impair, or invalidate this Ordinance as a whole or any part or provision hereof other than the part declared to be invalid or unconstitutional; and the City Council of the City of Fulshear declares that it would have passed each and every part of the same notwithstanding the omission of any such part thus declared to be invalid or unconstitutional, whether there be one or more parts.

PASSED, APPROVED, AND ADOPTED this 20th day of September 2007.

James W. Roberts
Mayor

ATTEST:

D. Gordon Offord
City Secretary

ORDINANCE NO. 07-960

AN ORDINANCE ANNEXING THE HEREAFTER DESCRIBED 560.83 ACRE TRACT TO THE CITY OF FULSHEAR, TEXAS, AND EXTENDING THE BOUNDARY LIMITS OF SAID CITY SO AS TO INCLUDE SAID HEREINAFTER DESCRIBED TERRITORY AND TO ALL FUTURE INHABITANTS OF SAID PROPERTY ALL OF THE RIGHTS AND PRIVILEGES OF OTHER CITIZENS AND BINDING SAID FUTURE INHABITANTS BY ALL OF THE ACTS AND ORDINANCES OF THE SAID CITY AND ADOPTING A SERVICE PLAN FOR EXTENDING CITY SERVICES INTO SUCH AREA.

WHEREAS, FULSHEAR LAND PARTNERS, LTD. and FULSHEAR LAND INVESTMENT PARTNERS, LTD. has petitioned the City of Fulshear to annex approximately 560.83 acres, more or less, located in the City of Fulshear's exclusive extraterritorial jurisdiction, in Fort Bend County; and

WHEREAS, the City Council of the City of Fulshear, Texas, has heretofore determined it is in the best interest of the City of Fulshear to annex that certain approximately 560.83 acre tract described on Exhibit "A" attached hereto and made a part hereof; and

WHEREAS, in accordance with Section 43.028, Local Government Code, the City heard the petition and agreement for and against the annexation on July 17, 2007 and August 21, 2007; and

WHEREAS, the City Council has determined that such land is adjacent and contiguous to the City of Fulshear, Texas, is one-half mile or less in width, is vacant and without residents and within the extraterritorial jurisdiction of the City of Fulshear, and meets all the other requirements of Chapter 43, Local Government Code; and

WHEREAS, the City Council finds that all requirements of the laws of the State of Texas and the Charter and ordinances of the City of Fulshear regulating the annexation of territory into the limits of the City of Fulshear have been met, and all required notices have been timely published and posted and that all required public hearings have been held,

NOW THEREFORE BE IT ORDAINED BY THE CITY COUNCIL OF THE CITY OF FULSHEAR, TEXAS THAT:

I.

All matters set out in the preamble are true and correct and are incorporated herein as part of this Ordinance.

II.

A certain 560.83 acre tract of land described on Exhibit "A" attached hereto and made a part hereof, be and the same is hereby annexed to the City of Fulshear, Fort Bend County, Texas, and the boundary limits of the City of Fulshear, Texas, shall be and are hereby extended to include the

above described territory within the City of Fulshear, Texas, and same shall hereafter be included within the territorial limits of said City and said land and the present and future inhabitants thereof shall hereafter be entitled to all rights and privileges as are other citizens of the City of Fulshear, Texas and shall be bound by the acts and ordinances of the City of Fulshear, Texas, and the Municipal Service Plan under which the City services will be extended into the areas annexed heretofore adopted by the City of Fulshear is approved and made a part of this Ordinance, a copy of said Municipal Service Plan being attached hereto marked Exhibit "B", which shall be a binding contractual obligation of the City of Fulshear.

III.

The City Secretary is hereby directed to file a certified copy of this Ordinance with the County Clerk of Fort Bend County, Texas, and other appropriate officials and agencies as may be required by law.

This Ordinance is effective immediately upon its adoption.

PASSED by an affirmative vote of the City Council of the City of Fulshear, Texas this 18th day of September 2007.

CITY OF FULSHEAR, TEXAS

By: _____
JAMIE W. ROBERTS, Mayor

ATTEST:

By: _____
D. GORDON OFFORD
City Secretary

ALDERMEN VOTING:

BILL ARCHER	yes
J.B. COLLINS	yes
LAVERNE PATTERSON	yes
DENNIS CLACK	yes
CARL G. UTLEY	yes

FULSHEAR M.U.D. NO. 1
METES AND BOUNDS DESCRIPTION
560.83 ACRES OUT OF THE
CHURCHILL FULSHEAR LEAGUE A-29
FORT BEND COUNTY, TEXAS

All that certain 560.83 acres of land out of the Churchill Fulshear League, A-29 and being more particularly described by metes and bounds as follows, all coordinates and bearings being referred to the Texas Plain Coordinate System, South Central Zone, all distances shown are surface and may be converted to grid by multiplying by a combined scale factor of 0.99988107.

BEGINNING at a found ¾" iron pipe in the south right-of-way line of F.M. 1093 (100' wide) having state plain coordinates of Y=13812541.25 X=2951919.61;

Thence with said south right-of-way line for the following six courses and distances:

Thence S 89° 09' 28" E - 109.25' to a found ¾" iron pipe for angle point;
Thence N 88° 12' 11" E - 134.25' to a found ¾" iron pipe for angle point;
Thence N 83° 08' 18" E - 33.72' found 5/8" iron rod with cap for angle point;
Thence N 82° 10' 27" E - 104.93' found 5/8" iron rod with cap for angle point;
Thence N 78° 13' 14" E - 103.12' found 5/8" iron rod with cap for angle point;
Thence N 74° 48' 15" E - 12.13' found 5/8" iron rod with cap for angle point;

Thence S 1° 31' 32" E - 272.75,' with the west line of a called 1.00 acre tract of land described in a deed dated 03-19-2003 from Sethora Bell Nott West to Frances Smart filed at Clerk File No. 2003036275 to a found ¾" iron pipe for corner;

Thence N 88° 28' 28" E - 453.56' to a found 5/8" iron rod with cap for corner;

Thence N 1° 30' 19" W - 302.52', with the east line of a called 2.2155 acre tract of land described in a deed dated 05-10-1990 from Federal Deposit Insurance Corp. to City of Fulshear, filed at Volume 2210, Pg. 2029 Fort Bend County Deed Records to a found ¾" iron pipe for corner;

Thence N 84° 08' 03" W - 216.98', with a north line of said 2.2155 acre tract to a found 1 ¼" iron pipe for corner;

Thence N 74° 14' 26" E - 77.84', with the aforementioned south right-of-way line of FM 1093 to a found 5/8" iron rod with cap marking a point on a curve to the left having a central angle of 24° 08' 41" a radius of 429.11' a chord which bears N 62° 39' 20" E - 179.49';

Thence with said south right-of-way line for an arc distance of 180.83' to a found 5/8" iron rod with cap for corner;

Thence S 9° 14' 48" E - 59.19', with the west line of a called 0.16 acre tract of land described in a deed dated 05-02-2006 from Fort Bend County to Hugh Scott Hunsaker filed at Clerk File Number 2006068942 Fort Bend County Deed Records to a found 5/8" iron rod with cap for corner;

Thence N 80° 12' 01" E - 139.11', with the south line of said 0.16 acre tract to a found 5/8" iron rod with cap for corner;

Thence N 7° 01' 34" W - 136.00' to a found 5/8" iron rod with cap for corner;

Thence N 74° 43' 39" E - 50.75', with the south line of a tract of land described in a deed dated 01-05-1993 from Southern Pacific Railroad Company to Metropolitan Transit Authority of Harris

County , Texas filed at Volume 2478, Page 1664 Fort Bend County Deed Records to a found 5/8" iron rod with cap for corner;

Thence S 9° 32' 41" E - 231.27', with the west line of a called 0.512 acre tract of land described in a deed dated 05-02-2006 from Fort Bend County to Hugh Scott Hunsaker filed at Clerk File Number 2006068941 Fort Bend County Deed Records to a found 5/8" iron rod with cap for corner;

Thence N 82° 24' 05" E - 337.63' to a found 1 ¼" iron pipe for corner;

Thence N 26° 49' 05" E - 288.84' to a found 1 ¼" iron pipe for corner;

Thence N 83° 17' 51" E - 199.80' to a found 1 ¼" iron pipe for corner;

Thence N 6° 03' 32" W - 151.80' to a found 5/8" iron rod with cap for corner;

Thence N 82° 58' 28" E - 247.20', with the south line of the aforementioned Metropolitan Transit Authority of Harris County tract to a found 5/8" iron rod with cap for corner;

Thence S 1° 15' 35" E - 1101.52', with the west line of a called 20.089 acre tract of land described in a deed dated 07-02-1999 from Jim Gibson, Trustee to H&G Joint Venture, filed at Clerk File No. 1999057259 to a point for corner;

Thence S 88° 28' 28" W - 662.15', with the north line of a called 59.93 acre tract of land described in a deed dated 12-15-1967 from E.M. Huggins, Sr., et ux to Carrie R. Pickard, filed at Volume 495, Page 744 Fort Bend County Deed Records to a found 1" iron pipe for corner;

Thence S 1° 27' 32" E - 430.22', with the east line of said 59.93 acre tract to a found 5/8" iron rod with cap for corner;

Thence N 88° 30' 44" E - 2332.55', with the south line of said 59.93 acre tract to a found 5/8" iron rod with cap for corner;

Thence S 1° 40' 54" E - 1095.91', with the west line of a called 101.3597 acre tract of land conveyed to George Gayle Jr. filed at Volume 629, Page 43 Fort Bend County Deed Records to a found 5/8" iron rod with cap for angle point;

Thence S 2° 23' 52" E - 476.42', continuing with said west line to a found 4" iron pipe for corner;

Thence S 87° 45' 13" W - 14.70' to a found 5/8" iron rod with cap for corner;

Thence S 2° 06' 35" E - 3042.83', with the west line of a called 101.782 acre tract of land conveyed to George Gayle Jr. described in a deed filed at Volume 672, Page 169 Fort Bend County Deed Records to a found 5/8" iron rod with cap for corner;

Thence S 88° 46' 07" W - 14.40' to a found 5/8" iron rod with cap for corner;

Thence S 1° 20' 46" E - 1743.09', with the west line of a called 125 acre tract of land conveyed to Dan Harrison Jr. described in a deed filed at Volume 557, Page 227 Fort Bend County Deed Records to a found 5/8" iron rod with cap for corner;

Thence S 88° 39' 14" W - 2303.93', to a found 5/8" iron rod with cap for corner;

Thence N 62° 16' 40" W - 1252.23' with the north line of a tract of land conveyed to Dan J. Harrison III and Bruce Finch Harrison in a deed filed at Volume 565, Page 244 Fort Bend County Deed Records;

Thence along the margin of Grassy Lake for the following six courses and distances:

Thence N 31° 24' 28" E - 152.31' to an angle point;
Thence N 34° 24' 37" E - 154.00' to an angle point;
Thence N 23° 55' 37" E - 116.30' to an angle point;
Thence N 36° 00' 37" E - 224.00' to an angle point;
Thence N 21° 02' 37" E - 261.80' to an angle point;
Thence N 17° 46' 37" E - 288.22' to an angle point;

Thence N 68° 58' 13" W - 994.83', with the north line of a called 17.806 acre tract of land described in a deed dated 01-10-1987 from Anna Ruth Turner McCann to McCann Family Trusts filed at Volume 1928, Pg. 827 Fort Bend County Deed Records to a found ¾" iron pipe for corner;

Thence N 1° 34' 03" W - 1445.29', with the east line of a called 190 acre tract of land described in a deed dated 07-17-1987 from P. Michael Wells to P. Michael Wells, Trustee filed at Volume 1963, Page 1436 Fort Bend County Deed Records to a found ¾" iron pipe for angle point;

Thence N 1° 32' 09" W - 3846.77', continuing with said east line to the POINT OF BEGINNING containing 560.83 acres (24429915 square feet) of land for Fulshear M.U.D. No. 1 more or less.
Compiled from Survey by:

Prejean & Company, Inc.
Surveying / Mapping
December 08, 2006

STATE OF TEXAS
REGISTERED
DANIEL E. KERSTEN
4925
PROFESSIONAL
LAND SURVEYOR

MUNICIPAL SERVICE PLAN
FOR PROPOSED ANNEXATION
OF 560.83 ACRES OF LAND IN
FORT BEND COUNTY, TEXAS

FULSHEAR LAND PARTNERS, LTD. and FULSHEAR LAND INVESTMENT PARTNERS, LTD. (Owner), has petitioned the City of Fulshear to annex certain real property belonging to Owner, to with: 560.83 acres of land in the Churchill Fulshear League, Abstract 29, in Fort Bend County, Texas, being more particularly described by metes and bounds on Exhibit "A" attached hereto and made a part hereof (the Land). The annexation was requested by Owner under Section 43.028 Texas Local Government Code.

Whereas, the Land is vacant and there are no inhabitants on the Land, and

Whereas, the Land is subject to a Development Agreement (the Agreement) and approved by the City of Fulshear on or about March 26, 2007, and

Whereas, Owner proposes to develop the Land as part of Fort Bend County Municipal Utility District No. 1 (the District), as the FULSHEAR CREEK CROSSING Subdivision, subject to the Development Agreement and develop the Land primarily as a single family residential subdivision, with some commercial development, and

Whereas, the City of Fulshear has an adequate potable water supply and sufficient wastewater capacity to serve an area the size of the Land and such services about the Land, and the Land has access to public roads with F.M. 1093on its northern boundary, NOW THEREFORE

In consideration of the matters set forth in the preamble, which are herein adopted, and from the benefits arising to Owner and the City of Fulshear, the following Municipal Service Plan is adopted:

GENERALLY

The City of Fulshear has been requested to annex the Land that will become FULSHEAR CREEK CROSSING Subdivision as part of the District subject to the Development Agreement heretofore adopted by the City of Fulshear. Under the Agreement, the City of Fulshear provides potable water and wastewater treatment facilities to the boundary of the Land. The District will thereafter provide for distribution and collection facilities throughout the Land along with storm water runoff collection and retention.

Owner assumes full responsibility for construction of such facilities within the boundaries of the Land along with construction of all streets and roads.

SERVICE PLAN

Upon the effective date of annexation the City of Fulshear will provide to the Land those services which are provided to other areas of the City of Fulshear and as provided in said Development Agreement on such date, to-wit:

(1) Police protection;

(2) Fire protection;

(3) Solid Waste Collection, except in those instances where Owner elects to use the services of a private collector;

(4) Operation and maintenance of roads and streets including street lighting;

(5) Operation and maintenance of water and wastewater facilities in compliance with the Agreement.

Municipal services will be provided by the City of Fulshear at the same level as similar facilities are maintained throughout the City of Fulshear and as provided in said Development Agreement .

In the event the development of the Land as part of Fort Bend County Municipal Utility District No. 1 as heretofore set out fails to produce the municipal services in the area to be annexed, the City of Fulshear will proceed with the implementation of the above Service Plan pursuant to Local Government Code Section 43.056, at Owner's cost.

Construction of any water, sewer, street and drainage facilities (capital improvements) will be performed by Owner in accordance with the terms and conditions of the Agreement.

Construction of other capital improvements shall be considered by the City of Fulshear in the future as the needs dictate on the same basis as such capital improvements are considered for land similarly situated throughout the City of Fulshear.

This Service Plan shall be effective for a period of ten (10) years and shall be amended only in accordance with the Texas Local Government Code.

This Service Plan incorporates the Development Agreement hereinabove described and in the event of a conflict between this Service Plan and Development Agreement, in such event the Development Agreement shall control.

Approved this 18th day of September 2007.

CITY OF FULSHEAR, TEXAS

By: James W. Roberts
JAMES W. ROBERTS, Mayor

ATTEST:

By: D. Gordon Offord
D. GORDON OFFORD, City Secretary

APPROVED AND ACCEPTED:
FULSHEAR LAND PARTNERS, LTD.

By: D. H. Konopka
DOUGLAS H. KONOPKA
President

FULSHEAR LAND INVESTMENT PARTNERS, LTD.

By: D. H. Konopka
DOUGLAS H. KONOPKA
President

ORDINANCE NO. 07-961

AN ORDINANCE CONSENTING TO THE ADDITION OF 429.590 ACRES OF LAND TO FORT BEND COUNTY MUNICIPAL UTILITY DISTRICT NO. 151 FOR INCLUSION IN ITS DISTRICT.

BE IT ORDAINED BY THE CITY COUNCIL OF THE CITY OF FULSHEAR, TEXAS:

Section I.

That attached to this ordinance and made a part hereof is a petition requesting the consent of the City of Fulshear, Texas, to the annexation of 429.590 acres of land into the FORT BEND COUNTY MUNICIPAL UTILITY DISTRICT NO. 151; such petition is hereby granted, subject to the terms and conditions set forth herein.

Section II.

That the City Council further hereby notifies the referenced district, its residents and property owners of the provisions of applicable law allowing the City to annex any portion to the district located within the City's extraterritorial jurisdiction, including without limitation the land authorized to be included in the district hereby. The City requests that the district include a statement in its form required under Section 49.455, Texas Water Code, reflecting the possibility of such annexation by the City.

Section III.

That the City Council officially finds, determines, recites, and declares that a sufficient written notice of the date, hour, place and subject of this meeting of the City Council was posted at a place convenient to the public at the City Hall of the City for the time required by law preceding this meeting, as required by the Open Meetings Law, Tex. Gov't Code Ann., ch. 551 (Vernon Supp. 2004); and that this meeting was open to the public as required by law at all times during which this ordinance and the subject matter thereof was discussed, considered and formally acted upon. The City

Council further ratifies, approves and confirms such written notice and the contents and posting thereof.

Section IV.

This Ordinance shall take effect from and after the date of its passage, and all Ordinances or portion of Ordinances heretofore passed in conflict with the terms hereof are specifically repealed.

Section V.

If any provision, section, subsection, sentence, clause, phrase of this Ordinance, or the application of same to any person or set of circumstances is for any reason held to be unconstitutional, void or invalid, the validity of the remaining portions of this Ordinance or their application to other persons or sets of circumstance shall not be affected thereby, it being the intent of the City Council in adopting this Ordinance that no portion thereof or provision, or regulation contained herein, shall become inoperative or fail by reason of any unconstitutionality of any other portion hereof and all provisions of this Ordinance are declared to be severable for that purpose.

Section VI.

The City Secretary is instructed to post and publish notice of this Ordinance as required by law, by publishing only the descriptive caption.

PASSED AND APPROVED this 17th day of July, 2007.

THE CITY OF FULSHEAR, TEXAS

By: Jamie W. Roberts

JAMIE W. ROBERTS
Mayor

ATTEST:

148779

By: D. Gordon Offord
D. GORDON OFFORD
City Secretary

ALDERMAEN VOTING:

BILL ARCHER	yes
J.B. COLLINS	yes
LAVERNE PATTERSON	yes
DENNIS CLACK	yes
CARL G. UTLEY	yes

148779

ORDINANCE NO.07-961-10

FLOOD DAMAGE PREVENTION ORDINANCE

ARTICLE I

STATUTORY AUTHORIZATION, FINDINGS OF FACT, PURPOSE AND METHODS

SECTION A. STATUTORY AUTHORIZATION

The Legislature of the State of Texas has in the Flood Control Insurance Act, Texas Water Code, Section 16.315, delegated the responsibility of local governmental units to adopt regulations designed to minimize flood losses. Therefore, the Fulshear City Council of City of Fulshear, Texas does ordain as follows:

SECTION B. FINDINGS OF FACT

(1) The flood hazard areas of City of Fulshear are subject to periodic inundation, which results in loss of life and property, health and safety hazards, disruption of commerce and governmental services, and extraordinary public expenditures for flood protection and relief, all of which adversely affect the public health, safety and general welfare.

(2) These flood losses are created by the cumulative effect of obstructions in floodplains which cause an increase in flood heights and velocities, and by the occupancy of flood hazard areas by uses vulnerable to floods and hazardous to other lands because they are inadequately elevated, floodproofed or otherwise protected from flood damage.

SECTION C. STATEMENT OF PURPOSE

It is the purpose of this ordinance to promote the public health, safety and general welfare and to minimize public and private losses due to flood conditions in specific areas by provisions designed to:

(1) Protect human life and health;

(2) Minimize expenditure of public money for costly flood control projects;

(3) Minimize the need for rescue and relief efforts associated with flooding and generally undertaken at the expense of the general public;

(4) Minimize prolonged business interruptions;

(5) Minimize damage to public facilities and utilities such as water and gas mains, electric, telephone and sewer lines, streets and bridges located in floodplains;

(6) Help maintain a stable tax base by providing for the sound use and development of flood-prone areas in such a manner as to minimize future flood blight areas; and

(7) Insure that potential buyers are notified that property is in a flood area.

SECTION D. METHODS OF REDUCING FLOOD LOSSES

In order to accomplish its purposes, this ordinance uses the following methods:

(1) Restrict or prohibit uses that are dangerous to health, safety or property in times of flood, or cause excessive increases in flood heights or velocities;

(2) Require that uses vulnerable to floods, including facilities which serve such uses, be protected against flood damage at the time of initial construction;

(3) Control the alteration of natural floodplains, stream channels, and natural protective barriers, which are involved in the accommodation of flood waters;

(4) Control filling, grading, dredging and other development which may increase flood damage;

(5) Prevent or regulate the construction of flood barriers which will unnaturally divert flood waters or which may increase flood hazards to other lands.

ARTICLE 2

DEFINITIONS

Unless specifically defined below, words or phrases used in this ordinance shall be interpreted to give them the meaning they have in common usage and to give this ordinance its most reasonable application.

ALLUVIAL FAN FLOODING - means flooding occurring on the surface of an alluvial fan or similar landform which originates at the apex and is characterized by high-velocity flows; active processes of erosion, sediment transport, and deposition; and unpredictable flow paths.

APEX - means a point on an alluvial fan or similar landform below which the flow path of the major stream that formed the fan becomes unpredictable and alluvial fan flooding can occur.

APPURTENANT STRUCTURE – means a structure which is on the same parcel of property as the principal structure to be insured and the use of which is incidental to the use of the principal structure

AREA OF FUTURE CONDITIONS FLOOD HAZARD – means the land area that would be inundated by the 1-percent-annual chance (100 year) flood based on future conditions hydrology.

AREA OF SHALLOW FLOODING - means a designated AO, AH, AR/AO, AR/AH, or VO zone on a community's Flood Insurance Rate Map (FIRM) with a 1 percent or greater annual chance of flooding to an average depth of 1 to 3 feet where a clearly defined channel does not exist, where the path of flooding is unpredictable and where velocity flow may be evident. Such flooding is characterized by ponding or sheet flow.

AREA OF SPECIAL FLOOD HAZARD - is the land in the floodplain within a community subject to a 1 percent or greater chance of flooding in any given year. The area may be designated as Zone A on the Flood Hazard Boundary Map (FHBM). After detailed rate making has been completed in preparation for publication of the FIRM, Zone A usually is refined into Zones A, AO, AH, A1-30, AE, A99, AR, AR/A1-30, AR/AE, AR/AO, AR/AH, AR/A, VO, V1-30, VE or V.

BASE FLOOD - means the flood having a 1 percent chance of being equaled or exceeded in any given year.

BASE FLOOD ELEVATION (BFE) – The elevation shown on the Flood Insurance Rate Map (FIRM) and found in the accompanying Flood Insurance Study (FIS) for Zones A, AE, AH, A1-A30, AR, V1-V30, or VE that indicates the water surface elevation resulting from the flood that has a 1% chance of equaling or exceeding that level in any given year - also called the Base Flood.

BASEMENT - means any area of the building having its floor subgrade (below ground level) on all sides.

BREAKAWAY WALL – means a wall that is not part of the structural support of the building and is intended through its design and construction to collapse under specific lateral loading forces, without causing damage to the elevated portion of the building or supporting foundation system.

CRITICAL FEATURE - means an integral and readily identifiable part of a flood protection system, without which the flood protection provided by the entire system would be compromised.

DEVELOPMENT - means any man-made change to improved and unimproved real estate, including but not limited to buildings or other structures, mining, dredging, filling, grading, paving, excavation or drilling operations or storage of equipment or materials.

ELEVATED BUILDING – means, for insurance purposes, a non-basement building, which has its lowest elevated floor, raised above ground level by foundation walls, shear walls, posts, piers, pilings, or columns.

EXISTING CONSTRUCTION - means for the purposes of determining rates, structures for which the "start of construction" commenced before the effective date of the FIRM or before January 1, 1975, for FIRMs effective before that date. "Existing construction" may also be referred to as "existing structures."

EXISTING MANUFACTURED HOME PARK OR SUBDIVISION - means a manufactured home park or subdivision for which the construction of facilities for servicing the lots on which the manufactured homes are to be affixed (including, at a minimum, the installation of utilities, the construction of streets, and either final site grading or the pouring of concrete pads) is completed before the effective date of the floodplain management regulations adopted by a community.

EXPANSION TO AN EXISTING MANUFACTURED HOME PARK OR SUBDIVISION - means the preparation of additional sites by the construction of facilities for servicing the lots on which the manufactured homes are to be affixed (including the installation of utilities, the construction of streets, and either final site grading or the pouring of concrete pads).

FLOOD OR FLOODING - means a general and temporary condition of partial or complete inundation of normally dry land areas from:

(1) the overflow of inland or tidal waters.
(2) the unusual and rapid accumulation or runoff of surface waters from any source.

FLOOD ELEVATION STUDY – means an examination, evaluation and determination of flood hazards and, if appropriate, corresponding water surface elevations, or an examination, evaluation and determination of mudslide (i.e., mudflow) and/or flood-related erosion hazards.

FLOOD INSURANCE RATE MAP (FIRM) - means an official map of a community, on which the Federal Emergency Management Agency has delineated both the special flood hazard areas and the risk premium zones applicable to the community.

FLOOD INSURANCE STUDY (FIS) – see *Flood Elevation Study*

FLOODPLAIN OR FLOOD-PRONE AREA - means any land area susceptible to being inundated by water from any source (see definition of flooding).

FLOODPLAIN MANAGEMENT - means the operation of an overall program of corrective and preventive measures for reducing flood damage, including but not limited to emergency preparedness plans, flood control works and floodplain management regulations.

FLOODPLAIN MANAGEMENT REGULATIONS - means zoning ordinances, subdivision regulations, building codes, health regulations, special purpose ordinances (such as a floodplain ordinance, grading ordinance and erosion control ordinance) and other applications of police power. The term describes such state or local regulations, in any combination thereof, which provide standards for the purpose of flood damage prevention and reduction.

FLOOD PROTECTION SYSTEM - means those physical structural works for which funds have been authorized, appropriated, and expended and which have been constructed specifically to modify flooding in order to reduce the

extent of the area within a community subject to a "special flood hazard" and the extent of the depths of associated flooding. Such a system typically includes hurricane tidal barriers, dams, reservoirs, levees or dikes. These specialized flood modifying works are those constructed in conformance with sound engineering standards.

FLOOD PROOFING - means any combination of structural and non-structural additions, changes, or adjustments to structures which reduce or eliminate flood damage to real estate or improved real property, water and sanitary facilities, structures and their contents.

FLOODWAY – see *Regulatory Floodway*

FUNCTIONALLY DEPENDENT USE - means a use, which cannot perform its intended purpose unless it is located or carried out in close proximity to water. The term includes only docking facilities, port facilities that are necessary for the loading and unloading of cargo or passengers, and ship building and ship repair facilities, but does not include long-term storage or related manufacturing facilities.

HIGHEST ADJACENT GRADE - means the highest natural elevation of the ground surface prior to construction next to the proposed walls of a structure.

HISTORIC STRUCTURE - means any structure that is:

(1) Listed individually in the National Register of Historic Places (a listing maintained by the Department of Interior) or preliminarily determined by the Secretary of the Interior as meeting the requirements for individual listing on the National Register;

(2) Certified or preliminarily determined by the Secretary of the Interior as contributing to the historical significance of a registered historic district or a district preliminarily determined by the Secretary to qualify as a registered historic district;

(3) Individually listed on a state inventory of historic places in states with historic preservation programs which have been approved by the Secretary of the Interior; or

(4) Individually listed on a local inventory or historic places in communities with historic preservation programs that have been certified either:

(a) By an approved state program as determined by the Secretary of the Interior or;

(b) Directly by the Secretary of the Interior in states without approved programs.

LEVEE - means a man-made structure, usually an earthen embankment, designed and constructed in accordance with sound engineering practices to contain, control, or divert the flow of water so as to provide protection from temporary flooding.

LEVEE SYSTEM - means a flood protection system which consists of a levee, or levees, and associated structures, such as closure and drainage devices, which are constructed and operated in accordance with sound engineering practices.

LOWEST FLOOR - means the lowest floor of the lowest enclosed area (including basement). An unfinished or flood resistant enclosure, usable solely for parking or vehicles, building access or storage in an area other than a basement area is not considered a building's lowest floor; **provided** that such enclosure is not built so as to render the structure in violation of the applicable non-elevation design requirement of Section 60.3 of the National Flood Insurance Program regulations.

MANUFACTURED HOME - means a structure transportable in one or more sections, which is built on a permanent chassis and is designed for use with or without a permanent foundation when connected to the required utilities. The term "manufactured home" does not include a "recreational vehicle".

MANUFACTURED HOME PARK OR SUBDIVISION - means a parcel (or contiguous parcels) of land divided into two or more manufactured home lots for rent or sale.

MEAN SEA LEVEL - means, for purposes of the National Flood Insurance Program, the National Geodetic Vertical Datum (NGVD) of 1929 or other datum, to which base flood elevations shown on a community's Flood Insurance Rate Map are referenced.

NEW CONSTRUCTION - means, for the purpose of determining insurance rates, structures for which the "start of construction" commenced on or after the effective date of an initial FIRM or after December 31, 1974, whichever is later, and includes any subsequent improvements to such structures. For floodplain management purposes, "new construction" means structures for

which the "start of construction" commenced on or after the effective date of a floodplain management regulation adopted by a community and includes any subsequent improvements to such structures.

NEW MANUFACTURED HOME PARK OR SUBDIVISION - means a manufactured home park or subdivision for which the construction of facilities for servicing the lots on which the manufactured homes are to be affixed (including at a minimum, the installation of utilities, the construction of streets, and either final site grading or the pouring of concrete pads) is completed on or after the effective date of floodplain management regulations adopted by a community.

RECREATIONAL VEHICLE - means a vehicle which is (i) built on a single chassis; (ii) 400 square feet or less when measured at the largest horizontal projections; (iii) designed to be self-propelled or permanently towable by a light duty truck; and (iv) designed primarily not for use as a permanent dwelling but as temporary living quarters for recreational, camping, travel, or seasonal use.

REGULATORY FLOODWAY - means the channel of a river or other watercourse and the adjacent land areas that must be reserved in order to discharge the base flood without cumulatively increasing the water surface elevation more than a designated height.

RIVERINE – means relating to, formed by, or resembling a river (including tributaries), stream, brook, etc.

SPECIAL FLOOD HAZARD AREA – see *Area of Special Flood Hazard*

START OF CONSTRUCTION - (for other than new construction or substantial improvements under the Coastal Barrier Resources Act (Pub. L. 97-348)), includes substantial improvement and means the date the building permit was issued, provided the actual start of construction, repair, reconstruction, rehabilitation, addition placement, or other improvement was within 180 days of the permit date. The actual start means either the first placement of permanent construction of a structure on a site, such as the pouring of slab or footings, the installation of piles, the construction of columns, or any work beyond the stage of excavation; or the placement of a manufactured home on a foundation. Permanent construction does not include land preparation, such as clearing, grading and filling; nor does it include the installation of streets and/or walkways; nor does it include excavation for basement, footings, piers or foundations or the erection of temporary forms; nor does it include the installation on the property of accessory buildings, such as garages or sheds not occupied as dwelling units or not part of the main structure. For a

substantial improvement, the actual start of construction means the first alteration of any wall, ceiling, floor, or other structural part of a building, whether or not that alteration affects the external dimensions of the building.

STRUCTURE – means, for floodplain management purposes, a walled and roofed building, including a gas or liquid storage tank, that is principally above ground, as well as a manufactured home.

SUBSTANTIAL DAMAGE - means damage of any origin sustained by a structure whereby the cost of restoring the structure to its before damaged condition would equal or exceed 50 percent of the market value of the structure before the damage occurred.

SUBSTANTIAL IMPROVEMENT - means any reconstruction, rehabilitation, addition, or other improvement of a structure, the cost of which equals or exceeds 50 percent of the market value of the structure before "start of construction" of the improvement. This term includes structures which have incurred "substantial damage", regardless of the actual repair work performed. The term does not, however, include either: (1) Any project for improvement of a structure to correct existing violations of state or local health, sanitary, or safety code specifications which have been identified by the local code enforcement official and which are the minimum necessary to assure safe living conditions or (2) Any alteration of a "historic structure", provided that the alteration will not preclude the structure's continued designation as a "historic structure."

VARIANCE – means a grant of relief by a community from the terms of a floodplain management regulation. (For full requirements see Section 60.6 of the National Flood Insurance Program regulations.)

VIOLATION - means the failure of a structure or other development to be fully compliant with the community's floodplain management regulations. A structure or other development without the elevation certificate, other certifications, or other evidence of compliance required in Section 60.3(b)(5), (c)(4), (c)(10), (d)(3), (e)(2), (e)(4), or (e)(5) is presumed to be in violation until such time as that documentation is provided.

WATER SURFACE ELEVATION - means the height, in relation to the National Geodetic Vertical Datum (NGVD) of 1929 (or other datum, where specified), of floods of various magnitudes and frequencies in the floodplains of coastal or riverine areas.

ARTICLE 3

GENERAL PROVISIONS

SECTION A. LANDS TO WHICH THIS ORDINANCE APPLIES

The ordinance shall apply to all areas of special flood hazard with the jurisdiction of the City of Fulshear.

SECTION B. BASIS FOR ESTABLISHING THE AREAS OF SPECIAL FLOOD HAZARD

The areas of special flood hazard identified by the Federal Emergency Management Agency in the current scientific and engineering report entitled, "The Flood Insurance Study (FIS) for {from the FIS Title}," dated {date of latest FIS and/or Index Panel}, with accompanying Flood Insurance Rate Maps and/or Flood Boundary-Floodway Maps (FIRM and/or FBFM) dated {date of latest FIRM and/or FBFM}. and any revisions thereto are hereby adopted by reference and declared to be a part of this ordinance.

SECTION C. ESTABLISHMENT OF DEVELOPMENT PERMIT

A Floodplain Development Permit shall be required to ensure conformance with the provisions of this ordinance.

SECTION D. COMPLIANCE

No structure or land shall hereafter be located, altered, or have its use changed without full compliance with the terms of this ordinance and other applicable regulations.

SECTION E. ABROGATION AND GREATER RESTRICTIONS

This ordinance is not intended to repeal, abrogate, or impair any existing easements, covenants, or deed restrictions. However, where this ordinance and another ordinance, easement, covenant, or deed restriction conflict or overlap, whichever imposes the more stringent restrictions shall prevail.

SECTION F. INTERPRETATION

In the interpretation and application of this ordinance, all provisions shall be; (1) considered as minimum requirements; (2) liberally construed in favor of the governing body; and (3) deemed neither to limit nor repeal any other powers granted under State statutes.

SECTION G. WARNING AND DISCLAIMER OR LIABILITY

The degree of flood protection required by this ordinance is considered reasonable for regulatory purposes and is based on scientific and engineering considerations. On rare occasions greater floods can and will occur and flood heights may be increased by man-made or natural causes. This ordinance does not imply that land outside the areas of special flood hazards or uses permitted within such areas will be free from flooding or flood damages. This ordinance shall not create liability on the part of the community or any official or employee thereof for any flood damages that result from reliance on this ordinance or any administrative decision lawfully made hereunder.

ARTICLE 4

ADMINISTRATION

SECTION A. DESIGNATION OF THE FLOODPLAIN ADMINISTRATOR

The Mayor or his designee is hereby appointed the Floodplain Administrator to administer and implement the provisions of this ordinance and other appropriate sections of 44 CFR (Emergency Management and Assistance - National Flood Insurance Program Regulations) pertaining to floodplain management.

SECTION B. DUTIES & RESPONSIBILITIES OF THE FLOODPLAIN ADMINISTRATOR

Duties and responsibilities of the Floodplain Administrator shall include, but not be limited to, the following:

(1) Maintain and hold open for public inspection all records pertaining to the provisions of this ordinance.

(2) Review permit application to determine whether to ensure that the proposed building site project, including the placement of manufactured homes, will be reasonably safe from flooding.

(3) Review, approve or deny all applications for development permits required by adoption of this ordinance.

(4) Review permits for proposed development to assure that all necessary permits have been obtained from those Federal, State or local governmental agencies (including Section 404 of the Federal Water Pollution Control Act Amendments of 1972, 33 U.S.C. 1334) from which prior approval is required.

(5) Where interpretation is needed as to the exact location of the boundaries of the areas of special flood hazards (for example, where there appears to be a conflict between a mapped boundary and actual field conditions) the Floodplain Administrator shall make the necessary interpretation.

(6) Notify, in riverine situations, adjacent communities and the State Coordinating Agency which is the Texas Water Development Board (TWDB), prior to any alteration or relocation of a watercourse, and submit evidence of such notification to the Federal Emergency Management Agency.

(7) Assure that the flood carrying capacity within the altered or relocated portion of any watercourse is maintained.

(8) When base flood elevation data has not been provided in accordance with Article 3, Section B, the Floodplain Administrator shall obtain, review and reasonably utilize any base flood elevation data and floodway data available from a Federal, State or other source, in order to administer the provisions of Article 5.

(9) When a regulatory floodway has not been designated, the Floodplain Administrator must require that no new construction, substantial improvements, or other development (including fill) shall be permitted within Zones A1-30 and AE on the community's FIRM, unless it is demonstrated that the cumulative effect of the proposed development, when combined with all other existing and anticipated development, will not increase the water surface elevation of the base flood more than one foot at any point within the community.

(10) Under the provisions of 44 CFR Chapter 1, Section 65.12, of the National Flood Insurance Program regulations, a community may approve

certain development in Zones A1-30, AE, AH, on the community's FIRM which increases the water surface elevation of the base flood by more than 1 foot, provided that the community **first** completes all of the provisions required by Section 65.12.

SECTION C. PERMIT PROCEDURES

(1) Application for a Floodplain Development Permit shall be presented to the Floodplain Administrator on forms furnished by him/her and may include, but not be limited to, plans in duplicate drawn to scale showing the location, dimensions, and elevation of proposed landscape alterations, existing and proposed structures, including the placement of manufactured homes, and the location of the foregoing in relation to areas of special flood hazard. Additionally, the following information is required:

(a) Elevation (in relation to mean sea level), of the lowest floor (including basement) of all new and substantially improved structures;

(b) Elevation in relation to mean sea level to which any nonresidential structure shall be floodproofed;

(c) A certificate from a registered professional engineer or architect that the nonresidential floodproofed structure shall meet the floodproofing criteria of Article 5, Section B (2);

(d) Description of the extent to which any watercourse or natural drainage will be altered or relocated as a result of proposed development;

(e) Maintain a record of all such information in accordance with Article 4, Section (B)(1);

(2) Approval or denial of a Floodplain Development Permit by the Flooplain Administrator shall be based on all of the provisions of this ordinance and the following relevant factors:

(a) The danger to life and property due to flooding or erosion damage;

(b) The susceptibility of the proposed facility and its contents to flood damage and the effect of such damage on the individual owner;

(c) The danger that materials may be swept onto other lands to the injury of others;

(d) The compatibility of the proposed use with existing and anticipated development;

(e) The safety of access to the property in times of flood for ordinary and emergency vehicles;

(f) The costs of providing governmental services during and after flood conditions including maintenance and repair of streets and bridges, and public utilities and facilities such as sewer, gas, electrical and water systems;

(g) The expected heights, velocity, duration, rate of rise and sediment transport of the floodwaters and the effects of wave action, if applicable, expected at the site;

(h) The necessity to the facility of a waterfront location, where applicable;

(i) The availability of alternative locations, not subject to flooding or erosion damage, for the proposed use.

SECTION D. VARIANCE PROCEDURES

(1) The Appeal Board, as established by the community, shall hear and render judgment on requests for variances from the requirements of this ordinance.

(2) The Appeal Board shall hear and render judgment on an appeal only when it is alleged there is an error in any requirement, decision, or determination made by the Floodplain Administrator in the enforcement or administration of this ordinance.

(3) Any person or persons aggrieved by the decision of the Appeal Board may appeal such decision in the courts of competent jurisdiction.

(4) The Floodplain Administrator shall maintain a record of all actions involving an appeal and shall report variances to the Federal Emergency Management Agency upon request.

(5) Variances may be issued for the reconstruction, rehabilitation or restoration of structures listed on the National Register of Historic Places or the State Inventory of Historic Places, without regard to the procedures set forth in the remainder of this ordinance.

(6) Variances may be issued for new construction and substantial improvements to be erected on a lot of 1/2 acre or less in size contiguous to and surrounded by lots with existing structures constructed below the base flood level, providing the relevant factors in Section C (2) of this Article have been fully considered. As the lot size increases beyond the 1/2 acre, the technical justification required for issuing the variance increases.

(7) Upon consideration of the factors noted above and the intent of this ordinance, the Appeal Board may attach such conditions to the granting of variances as it deems necessary to further the purpose and objectives of this ordinance (Article 1, Section C).

(8) Variances shall not be issued within any designated floodway if any increase in flood levels during the base flood discharge would result.

(9) Variances may be issued for the repair or rehabilitation of historic structures upon a determination that the proposed repair or rehabilitation will not preclude the structure's continued designation as a historic structure and the variance is the minimum necessary to preserve the historic character and design of the structure.

[10) Prerequisites for granting variances:

(a) Variances shall only be issued upon a determination that the variance is the minimum necessary, considering the flood hazard, to afford relief.

(b) Variances shall only be issued upon: (i) showing a good and sufficient cause; (ii) a determination that failure to grant the variance would result in exceptional hardship to the applicant, and (iii) a determination that the granting of a variance will not result in increased flood heights, additional threats to public safety, extraordinary public expense, create nuisances, cause fraud on or victimization of the public, or conflict with existing local laws or ordinances.

(c) Any application to which a variance is granted shall be given written notice that the structure will be permitted to be built with the lowest floor elevation below the base flood elevation, and that the cost of flood insurance will be commensurate with the increased risk resulting from the reduced lowest floor elevation.

(11) Variances may be issued by a community for new construction and substantial improvements and for other development necessary for the conduct

of a functionally dependent use provided that (i) the criteria outlined in Article 4, Section D (1)-(9) are met, and (ii) the structure or other development is protected by methods that minimize flood damages during the base flood and create no additional threats to public safety.

ARTICLE 5

PROVISIONS FOR FLOOD HAZARD REDUCTION

SECTION A. GENERAL STANDARDS

In all areas of special flood hazards the following provisions are required for all new construction and substantial improvements:

(1) All new construction or substantial improvements shall be designed (or modified) and adequately anchored to prevent flotation, collapse or lateral movement of the structure resulting from hydrodynamic and hydrostatic loads, including the effects of buoyancy;

(2) All new construction or substantial improvements shall be constructed by methods and practices that minimize flood damage;

(3) All new construction or substantial improvements shall be constructed with materials resistant to flood damage;

(4) All new construction or substantial improvements shall be constructed with electrical, heating, ventilation, plumbing, and air conditioning equipment and other service facilities that are designed and/or located so as to prevent water from entering or accumulating within the components during conditions of flooding;

(5) All new and replacement water supply systems shall be designed to minimize or eliminate infiltration of flood waters into the system;

(6) New and replacement sanitary sewage systems shall be designed to minimize or eliminate infiltration of flood waters into the system and discharge from the systems into flood waters; and,

(7) On-site waste disposal systems shall be located to avoid impairment to them or contamination from them during flooding.

SECTION B. <u>SPECIFIC STANDARDS</u>

In all areas of special flood hazards where base flood elevation data has been provided as set forth in (i) Article 3, Section B, (ii) Article 4, Section B (8), or (iii) Article 5, Section C (3), the following provisions are required:

(1) **Residential Construction** - new construction and substantial improvement of any residential structure shall have the lowest floor (including basement), elevated to or above the base flood elevation. A registered professional engineer, architect, or land surveyor shall submit a certification to the Floodplain Administrator that the standard of this subsection as proposed in Article 4, Section C (1) a., is satisfied.

(2) **Nonresidential Construction** - new construction and substantial improvements of any commercial, industrial or other nonresidential structure shall either have the lowest floor (including basement) elevated to or above the base flood level or together with attendant utility and sanitary facilities, be designed so that below the base flood level the structure is watertight with walls substantially impermeable to the passage of water and with structural components having the capability of resisting hydrostatic and hydrodynamic loads and effects of buoyancy. A registered professional engineer or architect shall develop and/or review structural design, specifications, and plans for the construction, and shall certify that the design and methods of construction are in accordance with accepted standards of practice as outlined in this subsection. A record of such certification which includes the specific elevation (in relation to mean sea level) to which such structures are floodproofed shall be maintained by the Floodplain Administrator.

(3) **Enclosures** - new construction and substantial improvements, with fully enclosed areas below the lowest floor that are usable solely for parking of vehicles, building access or storage in an area other than a basement and which are subject to flooding shall be designed to automatically equalize hydrostatic flood forces on exterior walls by allowing for the entry and exit of floodwaters. Designs for meeting this requirement must either be certified by a registered professional engineer or architect or meet or exceed the following minimum criteria:

(a) A minimum of two openings on separate walls having a total net area of not less than 1 square inch for every square foot of enclosed area subject to flooding shall be provided.

(b) The bottom of all openings shall be no higher than 1 foot above grade.

(c) Openings may be equipped with screens, louvers, valves, or other coverings or devices provided that they permit the automatic entry and exit of floodwaters.

(4) **Manufactured Homes -**

(a) Require that all manufactured homes to be placed within Zone A on a community's FHBM or FIRM shall be installed using methods and practices which minimize flood damage. For the purposes of this requirement, manufactured homes must be elevated and anchored to resist flotation, collapse, or lateral movement. Methods of anchoring may include, but are not limited to, use of over-the-top or frame ties to ground anchors. This requirement is in addition to applicable State and local anchoring requirements for resisting wind forces.

(b) Require that manufactured homes that are placed or substantially improved within Zones A1-30, AH, and AE on the community's FIRM on sites (i) outside of a manufactured home park or subdivision, (ii) in a new manufactured home park or subdivision, (iii) in an expansion to an existing manufactured home park or subdivision, or (iv) in an existing manufactured home park or subdivision on which a manufactured home has incurred "substantial damage" as a result of a flood, be elevated on a permanent foundation such that the lowest floor of the manufactured home is elevated to or above the base flood elevation and be securely anchored to an adequately anchored foundation system to resist flotation, collapse, and lateral movement.

(c) Require that manufactured homes be placed or substantially improved on sites in an existing manufactured home park or subdivision with Zones A1-30, AH and AE on the community's FIRM that are not subject to the provisions of paragraph (4) of this section be elevated so that either:

(i) the lowest floor of the manufactured home is at or above the base flood elevation, or

(ii) the manufactured home chassis is supported by reinforced piers or other foundation elements of at least equivalent strength that are no less than 36 inches in height above grade and be securely anchored to an

adequately anchored foundation system to resist flotation, collapse, and lateral movement.

(5) **Recreational Vehicles** - Require that recreational vehicles placed on sites within Zones A1-30, AH, and AE on the community's FIRM either (i) be on the site for fewer than 180 consecutive days, or (ii) be fully licensed and ready for highway use, or (iii) meet the permit requirements of Article 4, Section C (1), and the elevation and anchoring requirements for "manufactured homes" in paragraph (4) of this section. A recreational vehicle is ready for highway use if it is on its wheels or jacking system, is attached to the site only by quick disconnect type utilities and security devices, and has no permanently attached additions.

SECTION C. STANDARDS FOR SUBDIVISION PROPOSALS

(1) All subdivision proposals including the placement of manufactured home parks and subdivisions shall be consistent with Article 1, Sections B, C, and D of this ordinance.

(2) All proposals for the development of subdivisions including the placement of manufactured home parks and subdivisions shall meet Floodplain Development Permit requirements of Article 3, Section C; Article 4, Section C; and the provisions of Article 5 of this ordinance.

(3) Base flood elevation data shall be generated for subdivision proposals and other proposed development including the placement of manufactured home parks and subdivisions which is greater than 50 lots or 5 acres, whichever is lesser, if not otherwise provided pursuant to Article 3, Section B or Article 4, Section B (8) of this ordinance.

(4) All subdivision proposals including the placement of manufactured home parks and subdivisions shall have adequate drainage provided to reduce exposure to flood hazards.

(5) All subdivision proposals including the placement of manufactured home parks and subdivisions shall have public utilities and facilities such as sewer, gas, electrical and water systems located and constructed to minimize or eliminate flood damage.

SECTION D. STANDARDS FOR AREAS OF SHALLOW FLOODING (AO/AH ZONES)

(1) Encroachments are prohibited, including fill, new construction, substantial improvements and other development within the adopted regulatory floodway unless it has been demonstrated through hydrologic and hydraulic analyses performed in accordance with standard engineering practice that the proposed encroachment would not result in any increase in flood levels within the community during the occurrence of the base flood discharge.

(2) If Article 5, Section E (1) above is satisfied, all new construction and substantial improvements shall comply with all applicable flood hazard reduction provisions of Article 5.

(3) Under the provisions of 44 CFR Chapter 1, Section 65.12, of the National Flood Insurance Program Regulations, a community may permit encroachments within the adopted regulatory floodway that would result in an increase in base flood elevations, provided that the community **first** completes all of the provisions required by Section 65.12.

SECTION F. SEVERABILITY

If any section, clause, sentence, or phrase of this Ordinance is held to be invalid or unconstitutional by any court of competent jurisdiction, then said holding shall in no way affect the validity of the remaining portions of this Ordinance.

SECTION G. PENALTIES FOR NON COMPLIANCE

No structure or land shall hereafter be constructed, located, extended, converted, or altered without full compliance with the terms of this court order and other applicable regulations. Violation of the provisions of this court order by failure to comply with any of its requirements (including violations of conditions and safeguards established in connection with conditions) shall constitute a misdemeanor. Any person who violates this court order or fails to comply with any of its requirements shall upon conviction thereof be fined not more than $500.00 for each violation, and in addition shall pay all costs and expenses involved in the case. Nothing herein contained shall prevent City of Fulshear from taking such other lawful action as is necessary to prevent or remedy any violation.

SECTION H. CERTIFICATION OF ADOPTION

Located within the areas of special flood hazard established in Article 3, Section B, are areas designated as shallow flooding. These areas have special flood hazards associated with flood depths of 1 to 3 feet where a clearly defined channel does not exist, where the path of flooding is unpredictable, and where velocity flow may be evident. Such flooding is characterized by ponding or sheet flow; therefore, the following provisions apply:

(1) All new construction and substantial improvements of **residential** structures have the lowest floor (including basement) elevated to or above the base flood elevation or the highest adjacent grade at least as high as the depth number specified in feet on the community's FIRM (at least 2 feet if no depth number is specified).

(2) All new construction and substantial improvements of **non-residential** structures;

(a) have the lowest floor (including basement) elevated to or above the base flood elevation or the highest adjacent grade at least as high as the depth number specified in feet on the community's FIRM (at least 2 feet if no depth number is specified), or

(b) together with attendant utility and sanitary facilities be designed so that below the base specified flood depth in an AO Zone, or below the Base Flood Elevation in an AH Zone, level the structure is watertight with walls substantially impermeable to the passage of water and with structural components having the capability of resisting hydrostatic and hydrodynamic loads of effects of buoyancy.

(3) A registered professional engineer or architect shall submit a certification to the Floodplain Administrator that the standards of this Section, as proposed in Article 4, Section C are satisfied.

(4) Require within Zones AH or AO adequate drainage paths around structures on slopes, to guide flood waters around and away from proposed structures.

SECTION E. <u>FLOODWAYS</u>

Floodways - located within areas of special flood hazard established in Article 3, Section B, are areas designated as floodways. Since the floodway is an extremely hazardous area due to the velocity of flood waters which carry debris, potential projectiles and erosion potential, the following provisions shall apply:

PASSED, APPROVED, AND ADOPTED the 16th day of October, 2007.

Jamie W. Roberts
Mayor

ATTEST:

Diana Gordon Offord
City Secretary

ARCHER-yes
COLLINS-yes
CLACK-yes
PATTERSON-yes
UTLEY-yes

APPROVED: _____
(MAYOR)

PASSED: 10-16-2007
(adoption date)

ORDINANCE BECOMES EFFECTIVE: **10-16-2007**
(effective date)

I, the undersigned, D. (Diana) Gordon Offord, do hereby certify that the above is a true and correct copy of an ordinance duly adopted by the Fulshear City Council, at a regular meeting duly convened on 10-16-2007.

_____
City Secretary

{SEAL}